Department of Health
and the Welsh Office

MC0017

Health Technical Memorandum

Building components

Fitted storage system

63

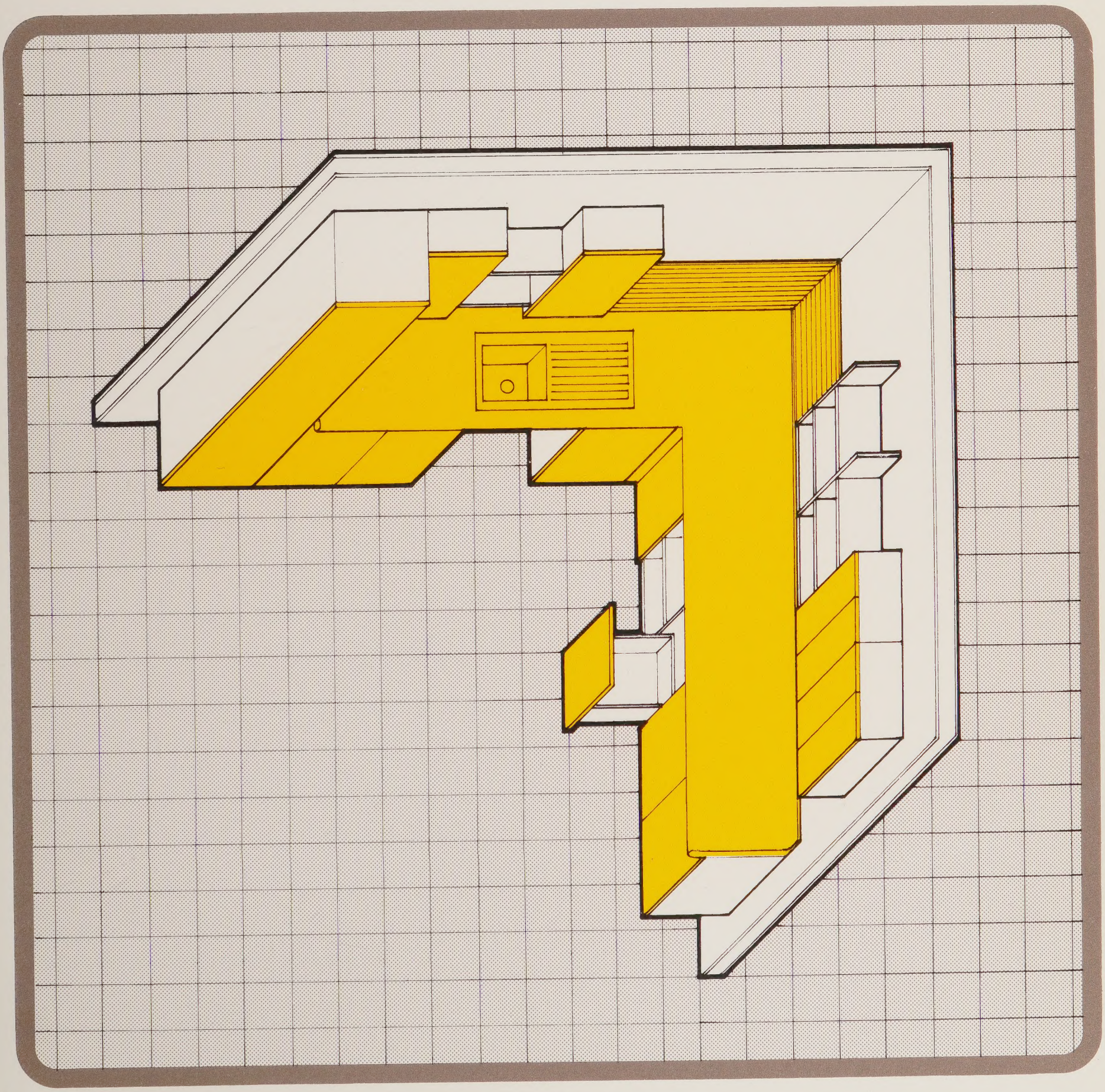

Department of Health
and the Welsh Office

Health Technical Memorandum

Building components

Fitted storage system

63

London:
Her Majesty's Stationery Office

©Crown copyright 1989
First published 1989
ISBN 0 11 321242 9

Contents

1 Introduction
1.1 Background
1.2 Scope and status
1.3 Relationship to other data
1.4 Design details
1.5 Coding
1.6 Terminology

2 System description
2.1 Typical installations
2.2 General principles
2.3 Main dimensions

3 Component parts of the system
3.1 List of components and broadsheet
3.2 Description of components

4 Performance
4.1 Strength
4.2 Surface finishes
4.3 Surface spread of flame
4.4 Ironmongery and fittings

5 Design application
5.1 Co-ordination with building and engineering design
5.2 Design of layouts
5.3 Project documentation

6 Site practice
6.1 Sequence of work
6.2 Builders work

Appendices:
A Performance tests
B Supplementary specification and design data

References

Digitized by the Internet Archive
in 2025 with funding from
UCL Library Special Collections

https://archive.org/details/ucl_mc0017

1 Introduction

1.1 Background

This is one of a series of *Health Technical Memoranda* which provide specification and design guidance on building components for health buildings which are not adequately covered by current British Standards.

The series supersedes all Component Data Base Mark 3 (and earlier Manufacturers Data Base) information.

The numbers and titles of the HTM in the series are:

54 Building components and user manual
55 Windows
56 Partitions
57 Internal glazing
58 Internal doorsets
59 Ironmongery
60 Ceilings
61 Flooring
62 Demountable storage system
63 Fitted storage system
64 Sanitary assemblies
65 Signs
66 Cubicle curtain track
67 Laboratory fitting out systems
68 Duct and panel assemblies
69 Protection
70 Fixings

The technical information in this series is the result of research and development funded by the Department as part of collaborative working arrangements over a number of years between the Department, the NHS and Industry through the medium of the Component Data Base.

Any enquiries regarding the technical content of this HTM should be directed to Health Building Directorate, Department of Health, Euston Tower, 286 Euston Road, London NW1 3DN.

As stated in the Introduction to HTM 62, the development of a demountable storage system (as described in that HTM) does not preclude the need for, or suitability of, a fitted storage system in situations in which user requirements can be predicted with reasonable accuracy, are simple, and are likely to remain relatively unchanged.

This HTM describes a fitted storage system which seeks to profit from the experience of earlier versions and from the development of a demountable system.

1.2 Scope and status

This HTM contains an illustrated general description of a fitted storage system suitable for use in health buildings. Appendices A and B give detailed performance and test data, and supplementary design data.

It is intended as general guidance only to building design teams responsible for the specification, project design and performance requirements, and to manufacturers in the development of products to meet those requirements.

It does not in any way diminish design team responsibilities for project specification and selection of components, or the responsibilities of manufacturers for the fitness for purpose of their products.

1.3 Relationship to other data

The main sources of other data relevant to the system are listed in the References section.

In particular, the attention of users and manufacturers is drawn to the performance tests for components set out in Appendix A.

This HTM was prepared for printing in July 1985 and amended in March 1989, and is based on data current at that date. Readers should ensure that they use the latest edition of all building legislation, British Standards, etc., and give first preference to products and services from sources which have been Registered under BSI Quality Assurance procedures or other certification schemes.

1.4 Design details

Manufacturers are encouraged to develop their own tested component ranges.

As an interim measure, model working drawings are available from Health Building Directorate, Department of Health, Euston Tower, 286 Euston Road, London NW1 3DN.

Manufacturers may claim compliance with this HTM when:

- Their offered components conform with all the recommendations in this HTM and test certification is available to validate this, or
- Their offered components are manufactured totally in accordance with the model working drawings and specification.
- In all cases, surface finishes must be tested in accordance with the requirements of this HTM and certification that the finish offered achieves the performance standard laid down must be available.

1.5 Coding

The coding system referred to in the document is based on the zones set out in 2.2.

1.6 Terminology

All dimensions are in millimetres but the abbreviation 'mm' is used only where they include decimal fractions or it is needed for clarity or consistency.

Corbel carcases are carcases fixed back to wall and providing support for worktops.

2 System description

2.1 Typical installations

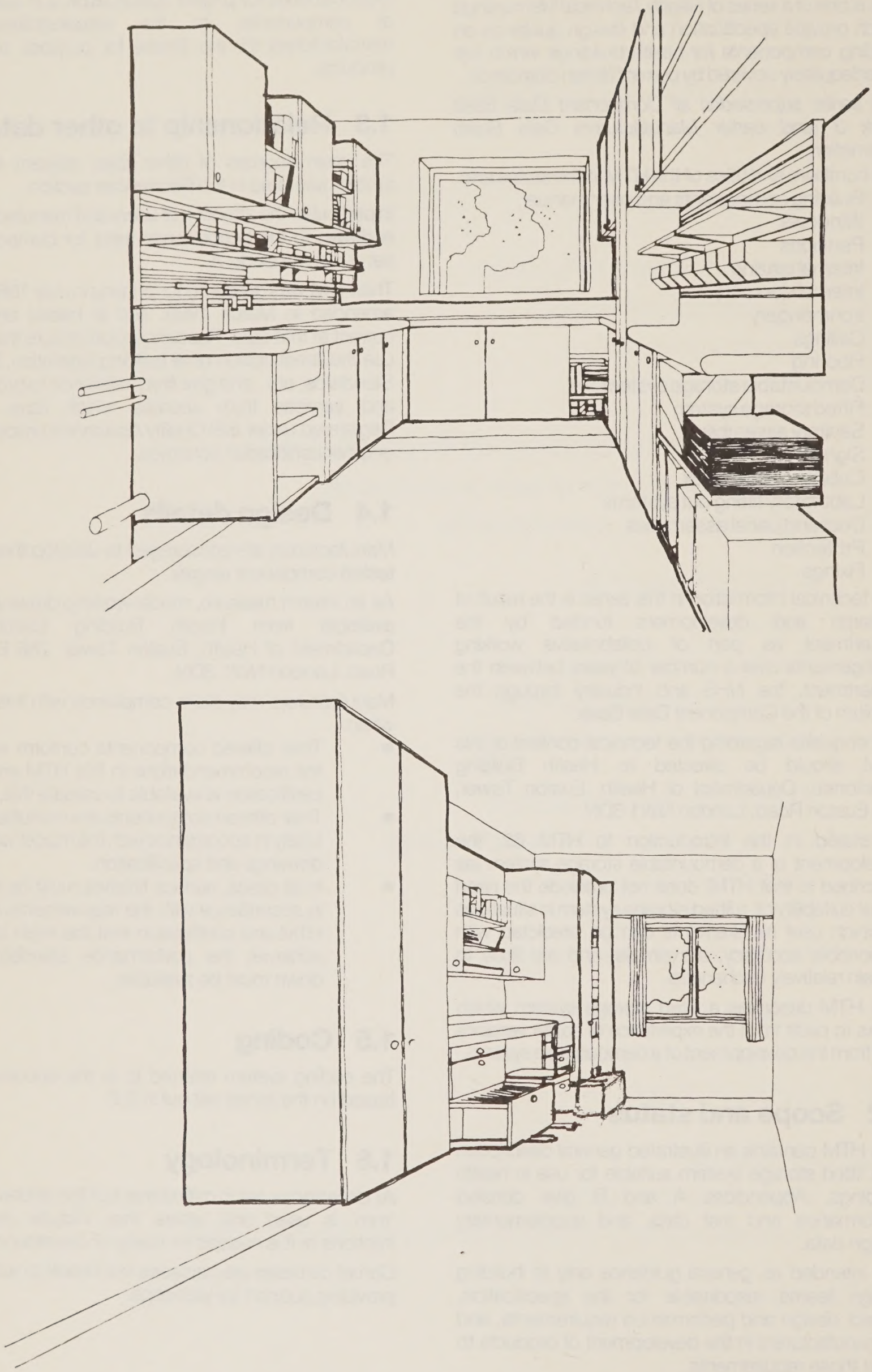

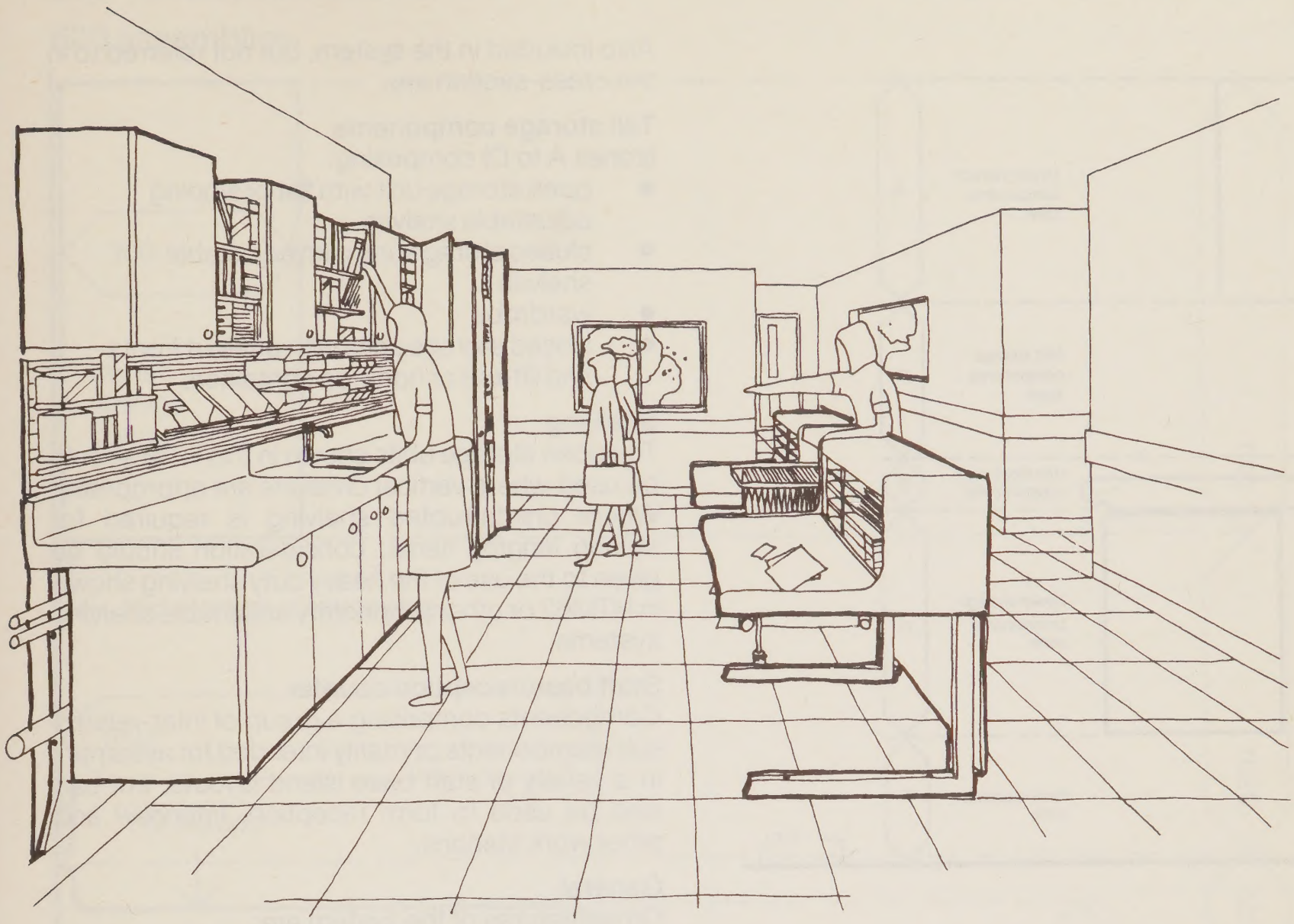

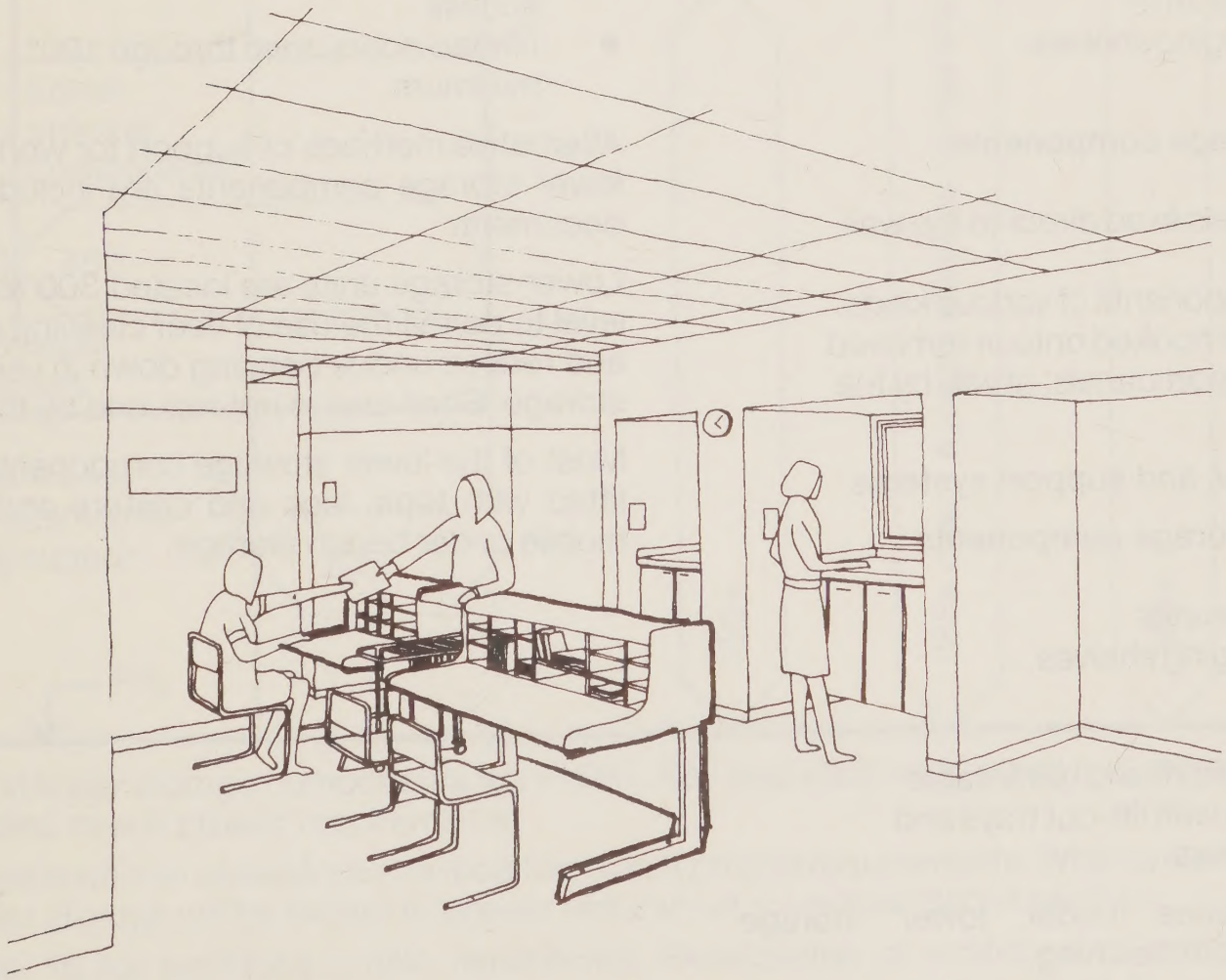

2.2 General principles

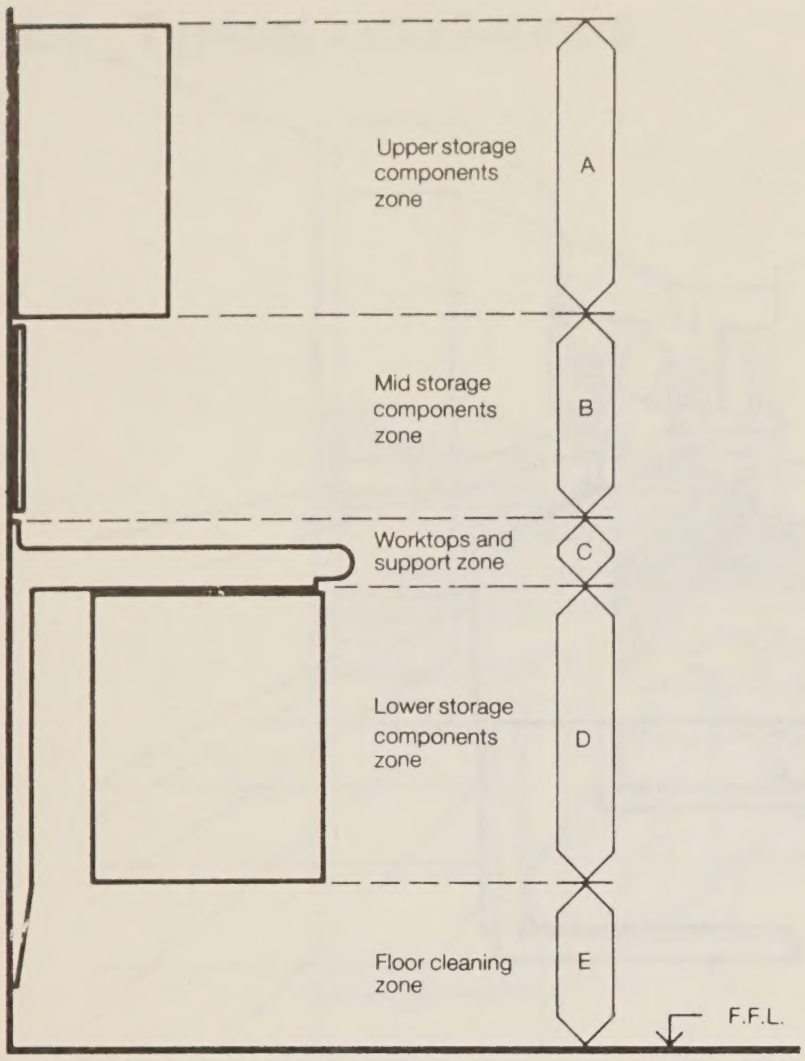

The system is based on five zones A to E, as shown in the above cross section, viz:

Zone A: Upper storage components comprising:

- open storage units
- optional bridging shelves
- cupboards

Zone B: Mid storage components comprising:

- support panels fixed direct to the wall face
- storage components of various kinds, which can be hooked onto or removed from the support panels, at will, by the users.

Zone C: Worktops and support systems

Zone D: Lower storage components comprising:

- open storage units
- optional bridging shelves
- cupboards
- drawer units
- various drop front and retractable storage units with lift-out trays and other containers

Zone E: Clearance under lower storage components for floor cleaning.

Also included in the system, but not referred to in the cross-section are:

Tall storage components (zones A to D) comprising:

- open storage unit with flat or sloping adjustable shelves
- closed storage unit with adjustable shelves
- wardrobe
- closed storage units with pull-out fronts and lift-out or hook-on containers

Shelving

The open storage units shown in this HTM should be used where vertical divisions are appropriate. Where uninterrupted shelving is required for storing lengthy items, consideration should be given to the use of the heavy duty shelving shown in HTM62 or other proprietary adjustable shelving systems.

Staff base/reception counter

Components comprising a group of inter-related sub-components primarily intended for assembly in a variety of staff base island layouts, but can also be used to form reception, interview and other work stations.

General

Other features of the system are:

- worktops in alternative materials to a common end profile, to enable end abutment of different work surfaces
- telescopic sliding gear on units with pull-out fronts or drawers to maximise access
- hinged doors open through 180° minimum.

Alternative methods of support for worktops and lower storage components are included in the document.

Lower storage units are located 300 above floor level to permit the use of floor cleaning machines and reduce undue bending down in use of lower storage. Shelf area is not reduced by this.

Most of the lower stowage components may be fitted with tops, legs and castors and used as mobile under bench storage.

2.3 Main dimensions

600 assemblies

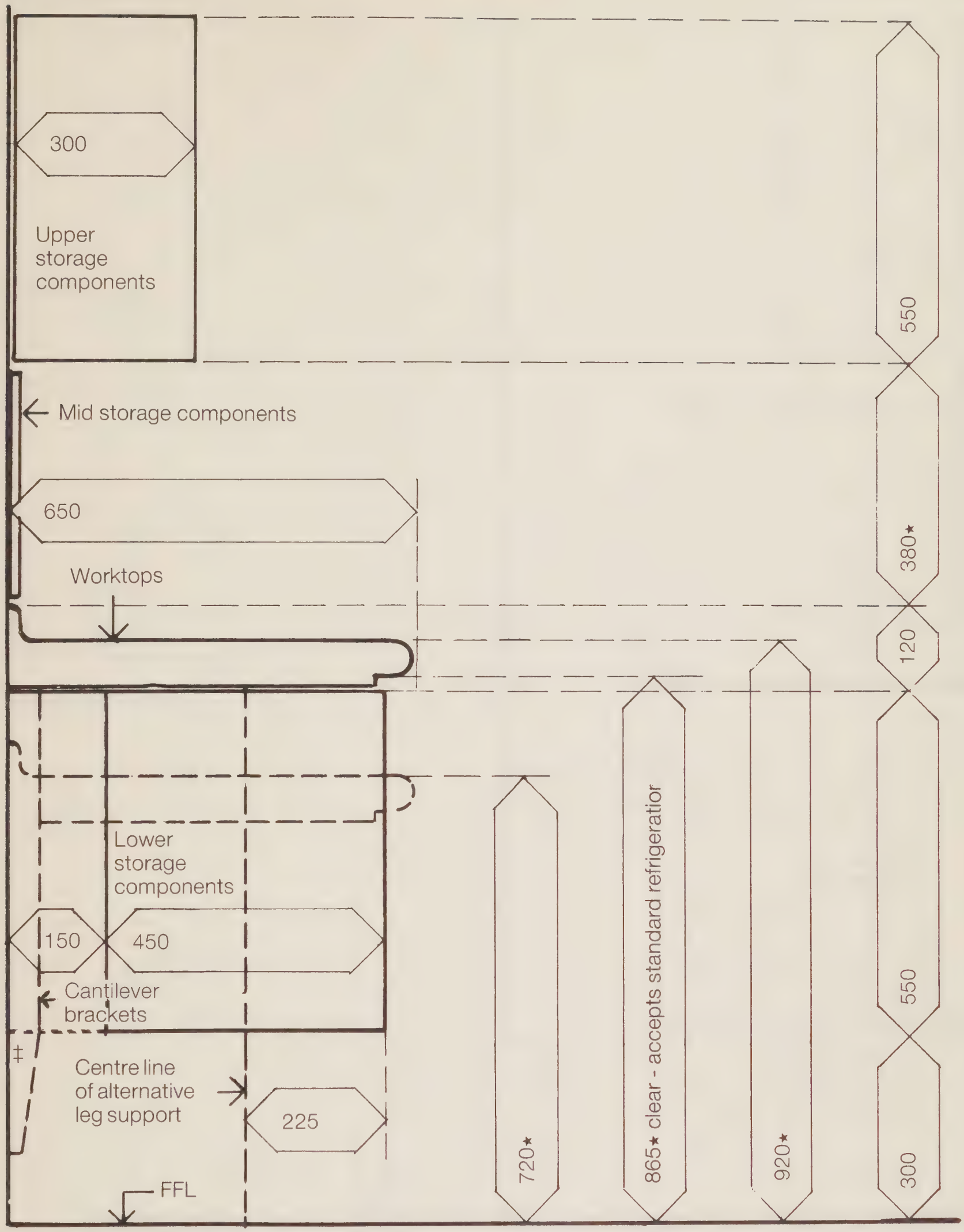

Upper and lower storage components are in 500, 600 and 1000 widths and mid storage support panels are in widths to suit project requirements.

★Dimensions with an asterisk can be modified to suit project requirements. When a worktop is at the lower level, lower storage will be limited to drawer units of not more than 350 in height.

See page 16 for worktops profile dimensions. Relationship of worktops to cantilever brackets (or alternative leg supports) and requirements for underframing to be subject to product and project specification.

‡ Extended sides of corbel carcase.

2.3 Main dimensions

500 assemblies

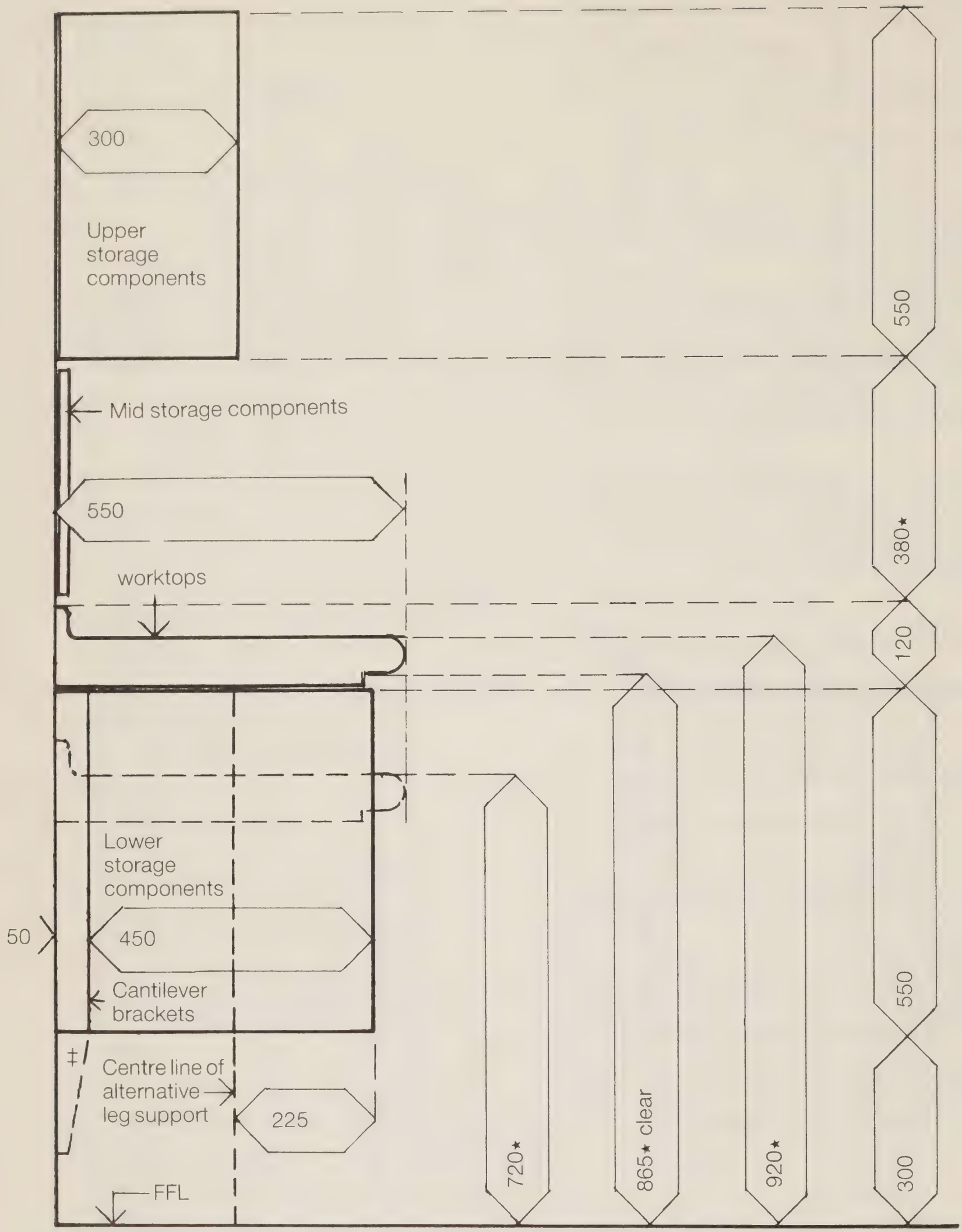

Upper and lower storage components are in 500, 600 and 1000 widths and mid storage support panels are in widths to suit project requirements.

★Dimensions with an asterisk can be modified to suit project requirements. When a worktop is at the lower level, lower storage will be limited to drawer units of not more than 350 in height.

See page 16 for worktops profile dimensions. Relationship of worktops to cantilever brackets (or alternative leg supports) and requirements for underframing to be subject to product and project specification.

‡ Extended sides of corbel carcase.

2.3 Main dimensions

300 assembly

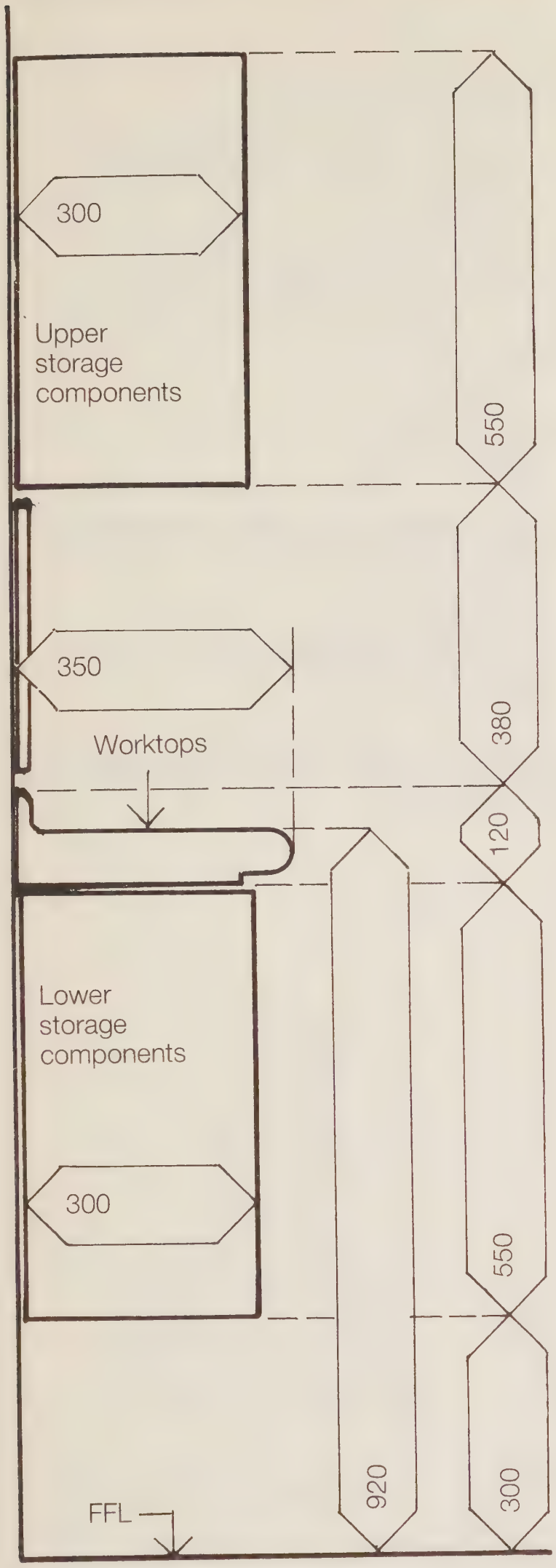

Upper and lower storage components are in 500, 600 and 1000 widths and mid storage support panels are in widths to suit project requirements.

See page 16 for worktops profile dimensions. Relationship of worktops to supporting lower storage components (or other means of support) to be subject to product and project specification.

Tall storage components

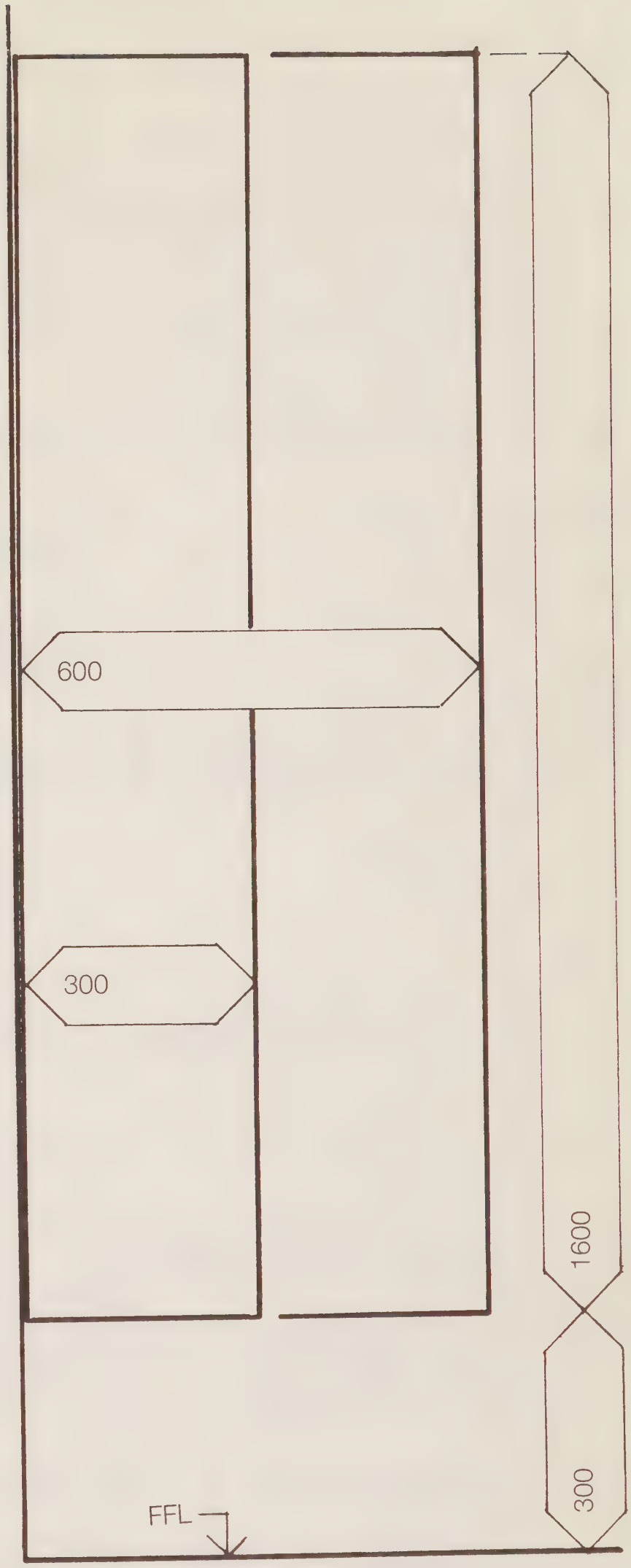

Tall storage components are 600 wide.

3 Component parts of the system

3.1 List of components

Upper storage components
- Open units with two fixed and one adjustable shelf and optional bridging shelves
- Cupboards with side hung door and one adjustable shelf
- Cupboards with pair of doors and one adjustable shelf
- Ward drugs cupboard (lockable)
- Medicines cupboard (lockable)
- Urine test cupboard (lockable).
- Pack dispenser with adjustable dividers
- Pigeon holes

Mid storage components
- Support panels
- Handbag shelf
- Writing shelf, hinged
- Writing shelf, fixed

Worktops and supports
- Linoleum faced worktops
- Plastic laminate faced worktops
- Stainless steel worktops (plain)
- Stainless steel worktops (dished)
- Corbel carcases
- Cantilever brackets
- Leg supports
- 'C' frames.

Lower storage components
- Open units with two adjustable shelves and optional bridging shelves
- Cupboards with side hung door and one adjustable shelf
- Cupboards with pair of doors and one adjustable shelf
- Corner carousel
- Unit with drop front hopper
- Unit with pull-out front and lift-out container
- Unit with pull-out front and two lift-out containers
- Unit with pull-out front and central double-sided support panel for tote boxes and other hook-on containers
- Unit with twin pull-out fronts and lift-out containers
- Single drawer unit
- Two drawer units
- Three drawer units
- Four drawer units
- Six drawer units
- Multi drawer units
- Mobile units.

Tall storage components
- Open shelf carcase with straight or sloping adjustable shelves and pack dispenser
- Open shelf carcase with adjustable shelves
- Wardrobe
- Unit with two pull-out fronts and lift-out containers
- Cupboard with adjustable shelves.

Accessories
- Filing drawer frames
- Tote boxes
- Shallow trays
- Catheter racks

Staff base/reception counter components for:
- Staff base island layouts
- Reception desks
- Interview desks
- Appointment booking desks and other work stations with similar functions.

The following pages illustrate the range with coded references.

The range

Upper storage components

	H		W		D	
A10	*	x	500	x	300	bridging shelves
A11	*	x	600	x	300	bridging shelves
A12	550	x	500	x	300	open shelf carcase
A13	550	x	600	x	300	open shelf carcase
A14	550	x	500	x	300	single door cupboard, hinge left
A15	550	x	500	x	300	single door cupboard, hinge right
A16	550	x	600	x	300	double door cupboard
A17	550	x	1000	x	300	double door cupboard
A18	550	x	600	x	300	medicines cupboard, lockable, swing-out interior, door racks
A19L	550	x	600	x	300	ward drugs cupboard, locakble, hinge left
A19R	550	x	600	x	300	ward drugs cupboard, lockable, hinge right
A20	550	x	600	x	300	urine test cupboard, lockable
A21	550	x	600	x	300	pack dispenser
A22	550	x	600	x	300	pigeon holes

Mid storage components

	H		W		D	
B05/1	150	x	500	x	20	support panel
B06/1	150	x	600	x	20	support panel
B10/1	150	x	1000	x	20	support panel
B12/1	150	x	1200	x	20	support panel
B05/2	300	x	500	x	20	support panel
B06/2	300	x	600	x	20	support panel
B10/2	300	x	1000	x	20	support panel
B12/2	300	x	1200	x	20	support panel
B28	150	x	300	x	150	handbag shelf
B29	150	x	500	x	150	handbag shelf
B30	200	x	600	x	400	writing shelf, hinged
B31	200	x	600	x	400	writing shelf, fixed, sloping

Lower storage components

	H		W		D	
D71	*	x	500	x	450	bridging shelves
D72	*	x	600	x	450	bridging shelves
D73	550	x	500	x	450	open shelf carcase
D74	550	x	600	x	450	open shelf carcase
D75	550	x	500	x	450	single door cupboard, hinge left
D76	550	x	500	x	450	single door cupboard, hinge right
D77	550	x	500	x	300	single door cupboard, hinge left
D78	550	x	500	x	300	single door cupboard, hinge right
D79	550	x	600	x	450	double door cupboard
D80	550	x	1000	x	450	double door cupboard
D81	550	x	600	x	300	double door cupboard
D82	550	x	1000	x	300	double door cupboard
D83	550	x	900	x	900	corner carousel
D84	550	x	500	x	450	hopper unit
D85	550	x	600	x	450	hopper unit
D86	550	x	500	x	450	twin pull out unit
D87	550	x	600	x	450	twin pull out unit
D88	550	x	500	x	450	single pull out unit
D89	550	x	600	x	450	single pull out unit
D90	550	x	500	x	450	pull out front with tote boxes
D91	550	x	600	x	450	pull out front with tote boxes
D92	150	x	500	x	450	single drawer unit
D93	150	x	600	x	450	single drawer unit
D94	550	x	500	x	450	two drawer unit
D95	550	x	600	x	450	two drawer unit
D96	150	x	500	x	450	two drawer unit
D97	150	x	600	x	450	two drawer unit
D98	350	x	500	x	450	two drawer unit
D99	350	x	600	x	450	two drawer unit
D100/3	350	x	500	x	450	three drawer unit
D101/3	350	x	600	x	450	three drawer unit
D102/3	550	x	500	x	450	three drawer unit
D103/3	550	x	600	x	450	three drawer unit
D100/4	350	x	500	x	450	four drawer unit
D101/4	350	x	600	x	450	four drawer unit
D102/4	550	x	500	x	450	four drawer unit
D103/4	550	x	600	x	450	four drawer unit
D104	550	x	500	x	450	six drawer unit
D105	550	x	500	x	450	multi drawer unit
D106	550	x	600	x	450	six drawer unit
D107	550	x	600	x	450	multi drawer unit

Tall storage components

	H		W		D	
AD110	1600	x	600	x	300	open shelf carcase pack dispenser
AD111	1600	x	600	x	300	open shelf carcase with shelves
AD112	1600	x	600	x	300	wardrobe
AD113	1600	x	600	x	300	cupboard with shelves
AE120	1600	x	600	x	600	cupboard with pull out front
AE121	1600	x	600	x	600	cupboard with shelves

Worktops

	H		W		D	
C41	120	x	*	x	350	linoleum worktop
C42	120	x	*	x	550	linoleum worktop
C43	120	x	*	x	650	linoleum worktop
C44	120	x	*	x	350	postformed laminate worktop
C45	120	x	*	x	550	postformed laminate worktop
C46	120	x	*	x	650	postformed laminate worktop
C47	120	x	*	x	550	plain stainless steel worktop
C48	120	x	*	x	650	plain stainless steel worktop
C49	120	x	*	x	550	dished stainless steel worktop
C50	120	x	*	x	650	dished stainless steel worktop

NOTE – C49, C50, C51 and C52 worktops may incorporate sink bowls, slop hoppers etc., or may be plain

C51	120	x	*	x	550	plain stainless steel worktops
C52	120	x	*	x	650	with sink bowls and drainers
C53	120	x	*	x	550	in any position.

Suppon ystems

Support systems vary depending on design team's choice, the five options are:

- corbel carcases supporting worktops
- cantilever brackets supporting worktops
- conventional legs
- 'C' frames
- a combination of the above.

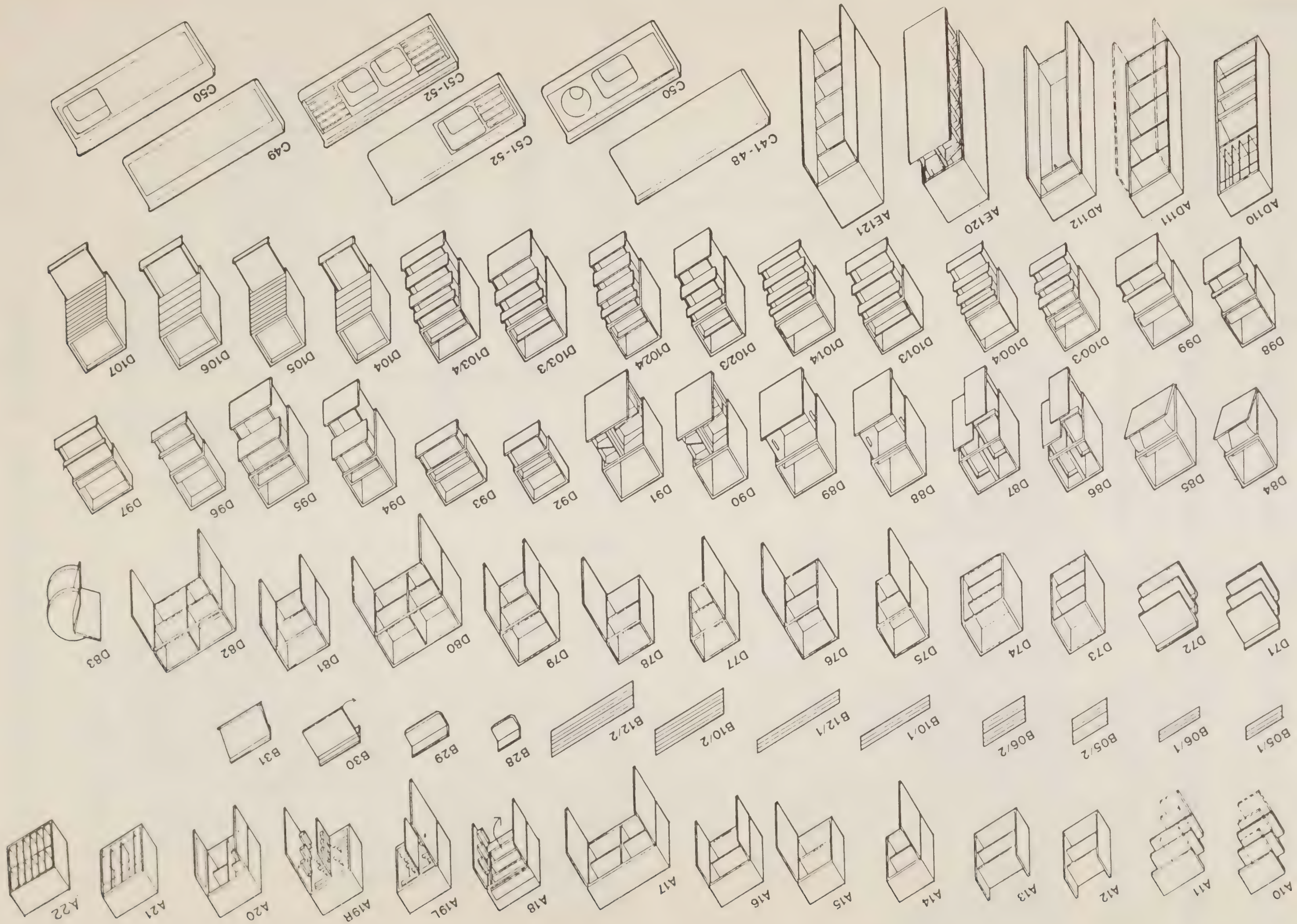
A10
A11
A12
A13
A14
A15
A16
A17
A18
A19L
A19R
A20
A21
A22
B05/1
B06/1
B05/2
B06/2
B10/1
B12/1
B10/2
B12/2
B28
B29
B30
B31
D71
D72
D73
D74
D75
D76
D77
D78
D79
D60
D81
D82
D83
D84
D85
D86
D87
D88
D89
D90
D91
D92
D93
D94
D95
D96
D97
D98
D99
D100/3
D100/4
D101/3
D101/4
D102/3
D102/4
D103/3
D103/4
D104
D105
D106
D107
AD110
AD111
AD112
AE120
AE121
C41-48
C50
C51-52
C51-52
C50
C49
C50

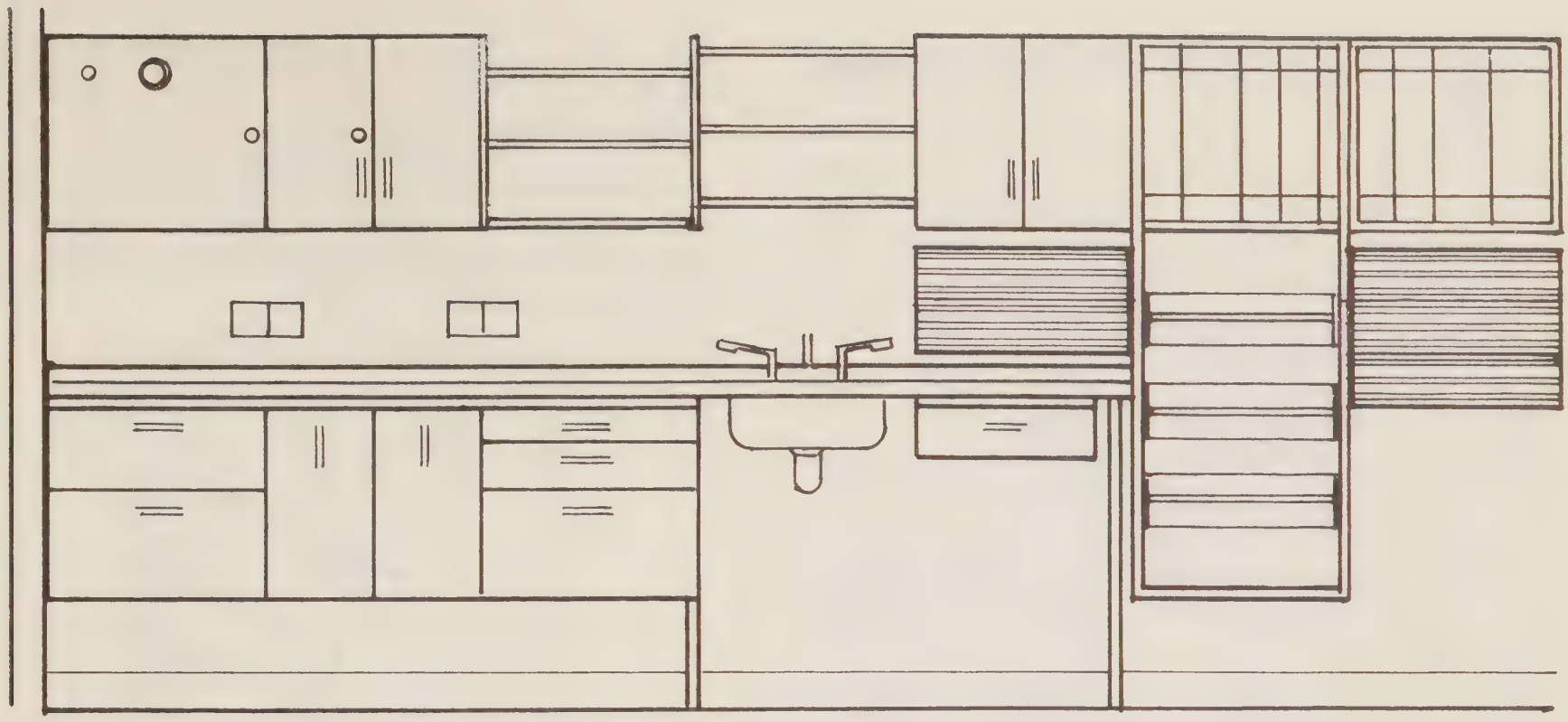

Typical elevation Clean Utility

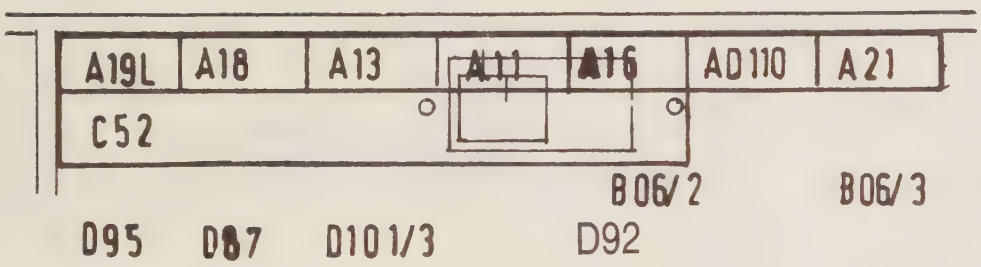

Coded layout
or
Computer Graphics with symbols

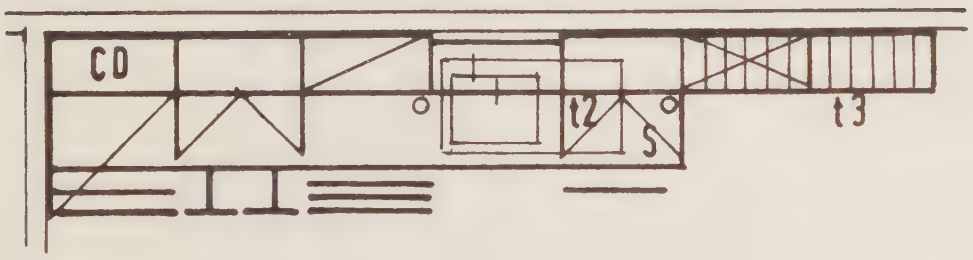

The above examples illustrate the use of the codes on project drawings

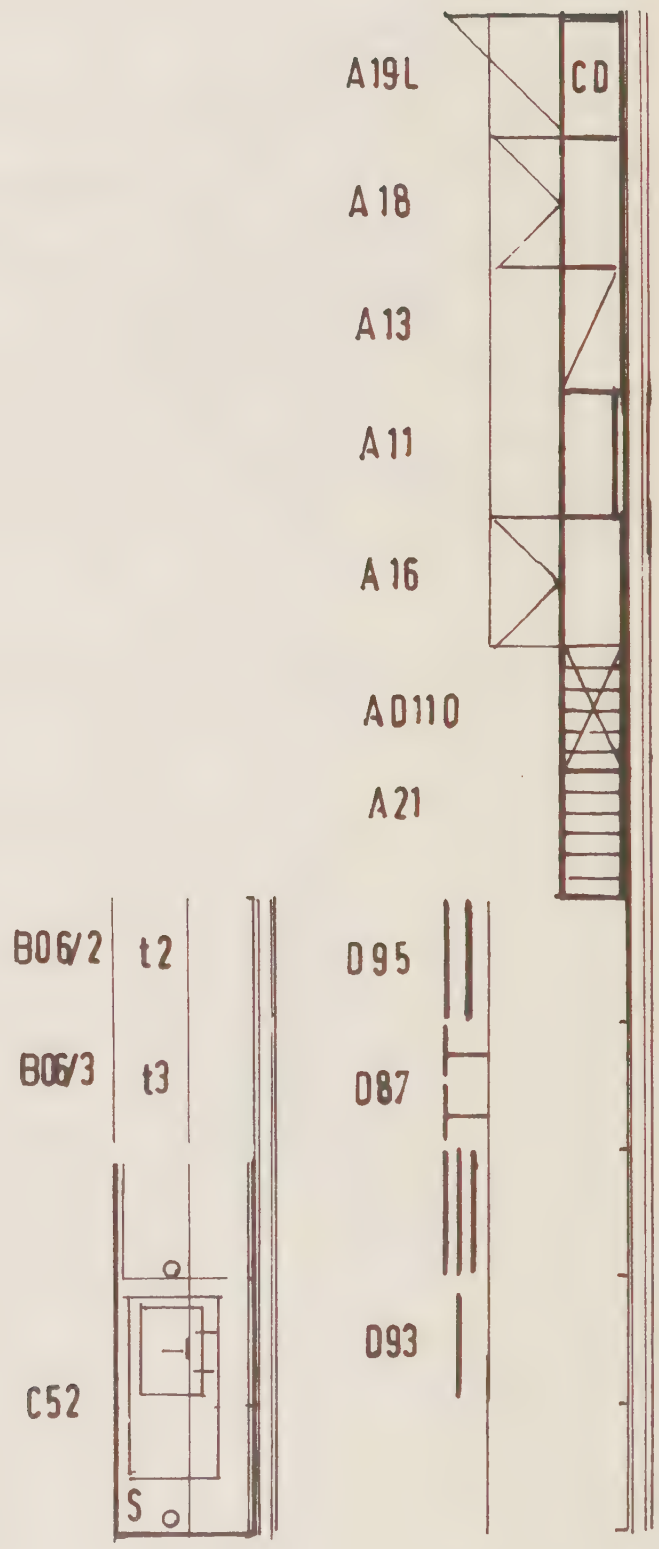

Key diagram

3.2 Description of components

As the design, manufacture, and supply of the component parts of the system are entirely open to competition, the illustrations of the components in this section are intended to provide a general indication only of system design requirements, and the descriptions of them are confined to:

- co-ordinating dimensions
- intended use (if not self-evident)
- design features or aspects of specification, relevant to user requirements
- reference to aspects of specification for which the user of the system should refer to manufacturers' product specifications (see below)

Dimensions are given as appropriate under the following designations:

H = the vertical height of the component
W = the width of the component
D = the depth (front to back) of the component.

To avoid repetition the following aspects of product specification will in all cases merit attention:

- specification of manufacturer's method of fabrication
- performance test data
- method of installation and builders work required
- provision of locks should be specified only where essential
- specification of hinges, catches, drawer runners, handles/pulls etc.
- details of support panels, tote boxes, and containers of all types generally referred to.

For ease of identification, components are coded according to the zone in which they are located (See 2.2).

Upper storage components

- Open shelf carcase with two fixed and one adjustable shelf. Bridging shelves, usually in sets of three can be used to form continuous open storage (codes A10, A11).

Corner shelves available as an option.

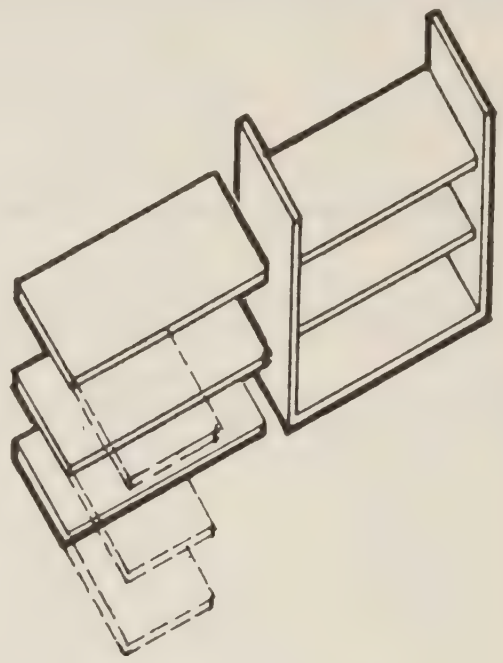

H	W	D	Code
550	500	300	A12
550	600	300	A13

- Cupboards with side hung door and one adjustable shelf

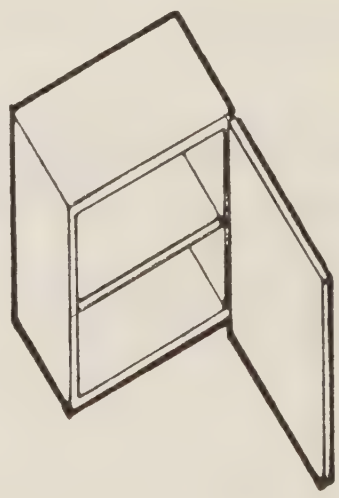

H	W	D	Code
550	500	300	A14 (LH door)
550	500	300	A15 (RH door)

• Cupboards with pair of doors and one adjustable shelf (1000 units have central division with one adjustable shelf on each side and with option of sliding doors.)

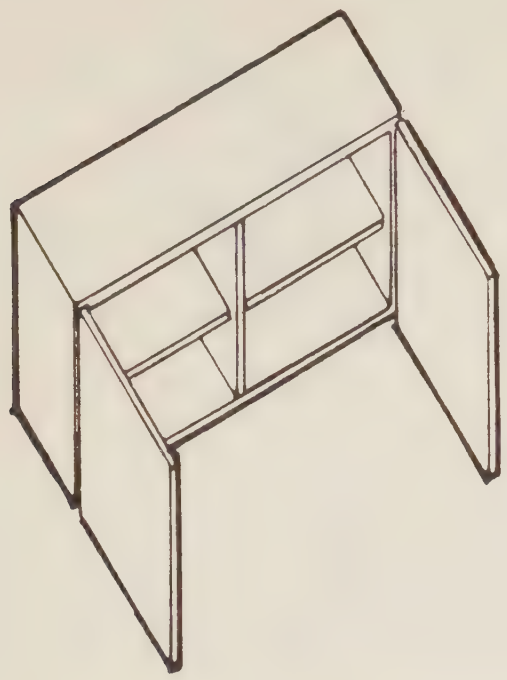

H	W	D	Code
550	600	300	A16
550	1000	300	A17

• Ward drugs cupboards (lockable) with stepped shelves and door racks, and integral warning light

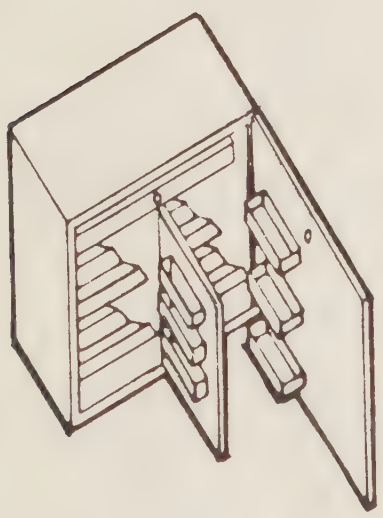

H	W	D	Code
550	600	300	A19L
550	600	300	A19R

Left and right hand versions.

For use in areas under 24 hour surveillance, and should be electrically connected to a remote warning light at a staff base or other control point.

See specification notes in Appendix B regarding locks and protective warning and indicator lights.

• Medicines cupboard (lockable) with swing out interior and door racks

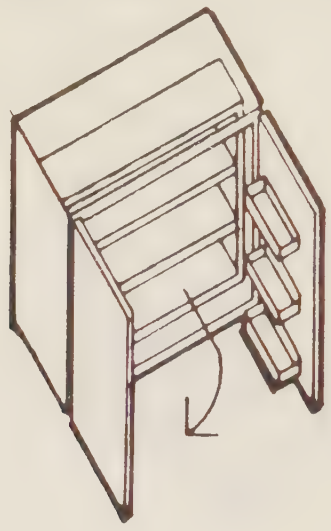

H	W	D	Code
550	600	300	A18

• Urine test cupboard (lockable) with central division, with door racks, two narrow fixed shelves, RH compartment containing one adjustable shelf with pin-up facility on door.

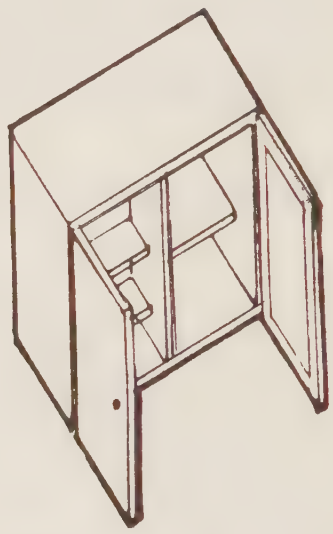

H	W	D	Code
550	600	300	A20

• Pack dispenser with adjustable dividers

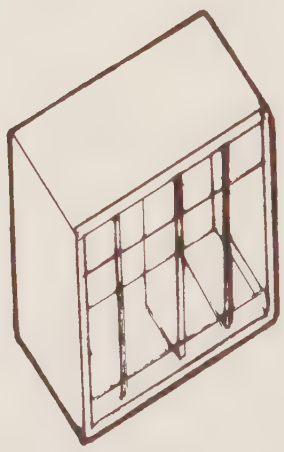

H	W	D	Code
550	600	300	A21

- Pigeon hole unit with up to nine vertical adjustable dividers

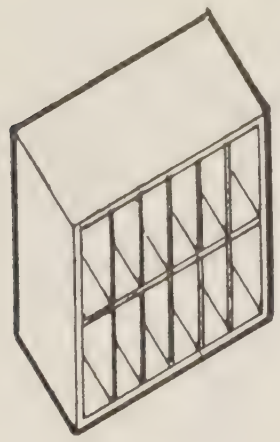

H	W	D	Code
550	600	300	A22

Mid storage components

The components illustrated are intended as a general indication only of a wide range of items compatible with the system which manufacturers may offer.

- Support panels (demountable)

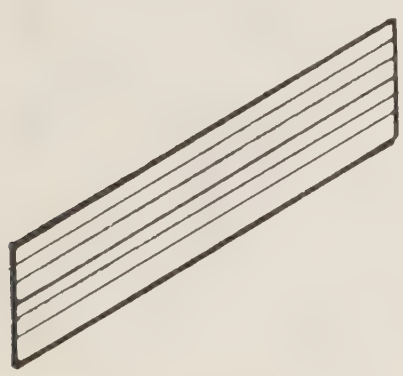

H	W	D	Code
150	500	20	B05/1
150	600	20	B06/1
150	1000	20	B10/1
150	1200	20	B12/1
300	500	20	B05/2
300	600	20	B06/2
300	1000	20	B10/2
300	1200	20	B12/2

H dimensions in 150 mm increments to suit project requirements and can extend to the other two zones depending upon worktop height.

Panels are in corrosion resistant material.

Principally used for mid storage but may be used in carcases to carry accessories such as tote boxes, catheter trays, etc.

- Handbag shelf (with rounded corners)

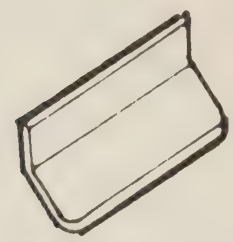

H	W	D	Code
100	300	150	B28
100	500	150	B29

- Writing shelf, hinged

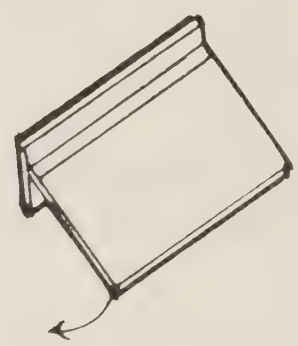

H	W	D	Code
150	600	400	B30

- Writing shelf, fixed and sloping

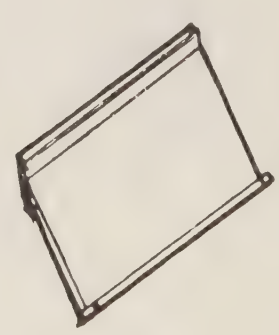

H	W	D	Code
200	600	400	B31

Worktops and supports

Materials listed below are preferred solutions. Other suitable materials may be used.

Worktops are linoleum or plastic laminate faced, or, are of stainless steel, all to a common profile for compatibility between abutting components of different materials. See page 16 for a recommended worktop profile and definition of H and D dimensions referred to below. W dimensions are subject to project requirements, but are normally in 100 increments.

Refer to manufacturers product data for details of exposed ends, ends for abutment, and end upstands. Worktops should be solid end capped.

- Linoleum faced worktops

H	W	D	Code
120	★	350	C41
120	★	550	C42
120	★	650	C43

Intended for use where activities call for a softer desk-like surface.

- Plastic laminate faced worktops

H	W	D	Code
120	★	350	C44
120	★	550	C45
120	★	650	C46

Intended for use in areas such as medical/nursing or pharmacy manufacturing.

Inset sinks (or sink units with drainers) may be pressure bonded into laminate worktops to suit project requirements.

- Stainless steel worktops (plain)

H	W	D	Code
120	★	550	C47
120	★	650	C48

Intended for use as heavy duty work surfaces for dry (or relatively dry) activities.

- Stainless steel worktops (dished)

H	W	D	Code
120	★	550	C49

- Stainless steel worktops (dished) which may have sink bowls, plaster sinks or hoppers in any position

H	W	D	Code
120	★	650	C50

- Stainless steel worktops (plain) with sink bowls and drainers in any position

H	W	D	Code
120	★	550	C51
120	★	650	C52

Stainless steel worktops, with or without sinks or hoppers shall be fitted with an earthing terminal.

Refer to HTM 64 and manufacturers' product specifications for size and location of sink bowls, details of taps, traps, etc.

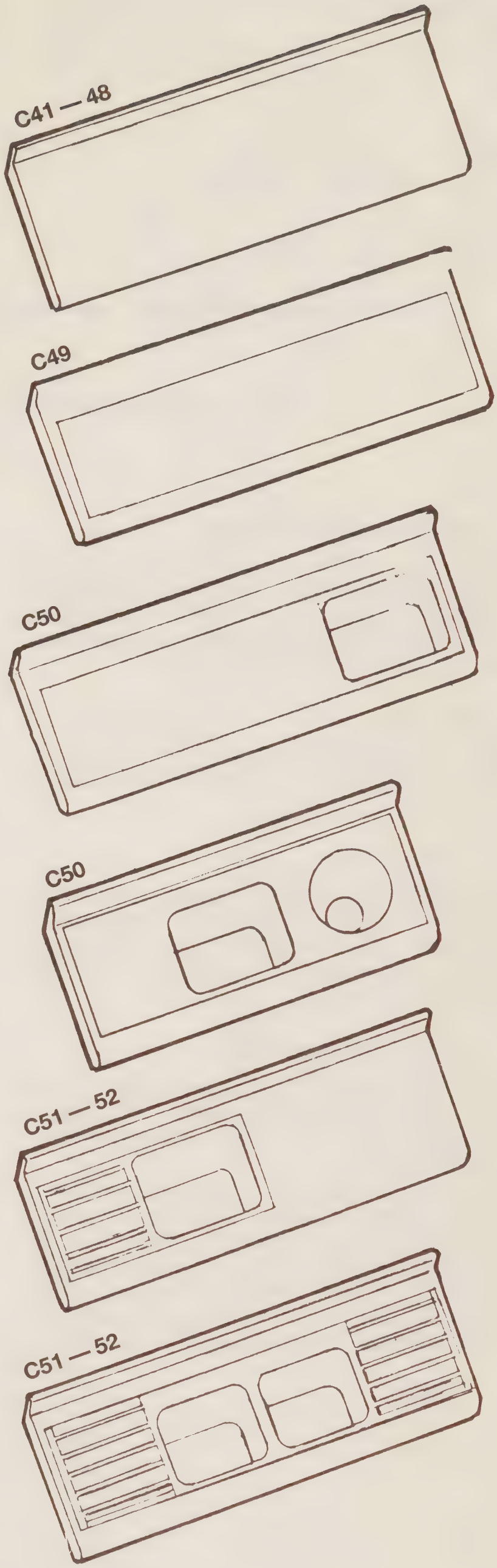

Profile of worktops

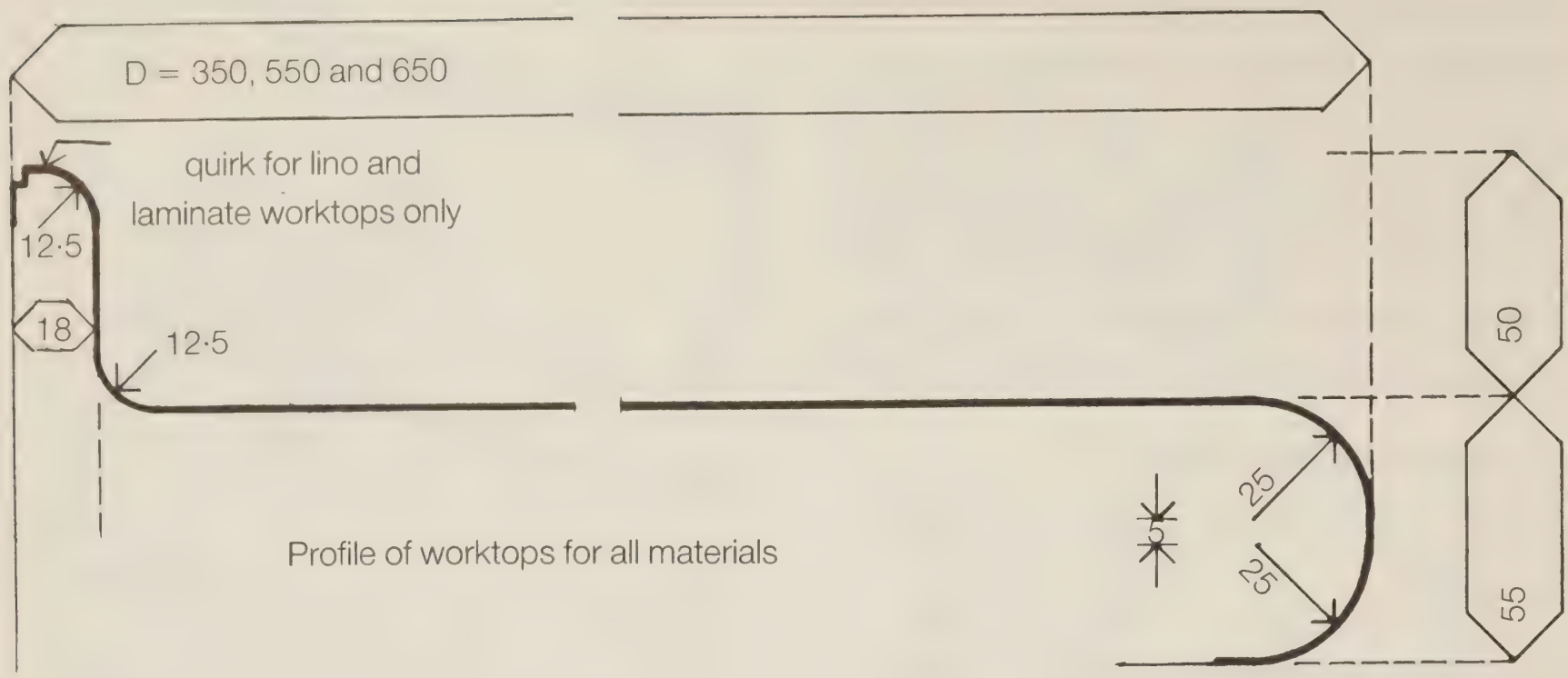

- **Vertical loading of worktops**

All worktops with corbel carcases, legs or brackets should be capable of supporting a force of 2500N at both ends and the centre of the front edge. Maximum temporary deflection shall be as set out in BS4875 Part 7 clause 6.2.

- **Deflection**

Spans of worktops exceeding 1800 may cause excessive deflection. See BS4875 Part 5 clause 6.1 and 6.2.

- **Corbel carcases**

Carcase units fixed back to partitions/walls may be used to support worktops, with side cheeks extended by 50 or 150 as appropriate. Knock out panels may be incorporated to accommodate service runs.

- **Cantilever brackets – C60**

Cantilever brackets may be used to support the 600 and 500 assemblies (see pages 5 and 6) and the standing and sitting work surface heights in each case.

Refer to manufacturers' product specifications for details of the design and specification of these brackets and requirements for fixing them to walls and partitions. Particular attention should be paid to the performance test and criteria referred to in Section 4 to ensure that brackets and fixings offered by a manufacturer comply.

- **Leg supports – C61.**

Where it is necessary to use leg supports, they should be in the following nominal heights with facility for vertical adjustment and incorporating a floor anchoring device:

- to underside of 920 worktop
- to underside of 720 worktop
- to underside of lower storage components.

- **"C" Frames – C62**

"C" frames may be used to support the 600 and 500 assemblies at standing and sitting work surface heights in each case. The frames may be secured back to walls or may be free-standing. They are used for the Staff Base on page 24.

Refer to manufacturers' product specifications for details of design and specification for leg frames and C frames, with particular attention to ease of cleaning at junction with flooring.

Lower storage components

Refer to manufacturers' data for details of fixings to underside of worktops.

Most of the lower storage components may be fitted with castors and tops and used as mobile under bench storage.

- Open shelf carcase with two adjustable shelves and optional bridging shelves (codes D71 and D72).

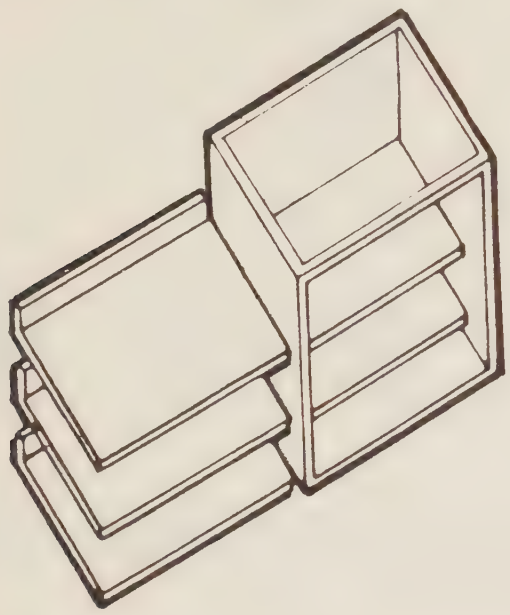

H	W	D	Code
550	500	450	D73
550	600	450	D74

- Cupboards with side-hung door and one adjustable shelf

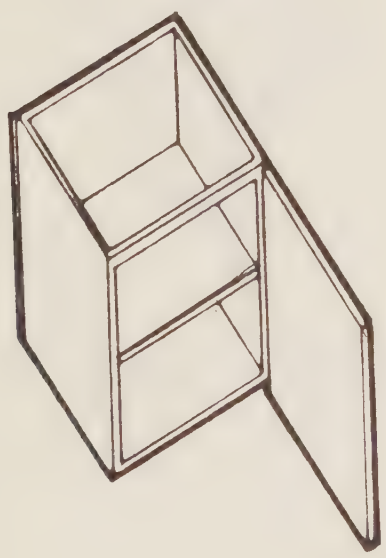

H	W	D	Code
550	500	300	D77 (LH door)
550	500	300	D78 (RH door)
550	500	450	D75 (LH door)
550	500	450	D76 (RH door)

- Cupboards with pair of doors and one adjustable shelf (1000 units have central division with one adjustable shelf on each side and option of sliding doors)

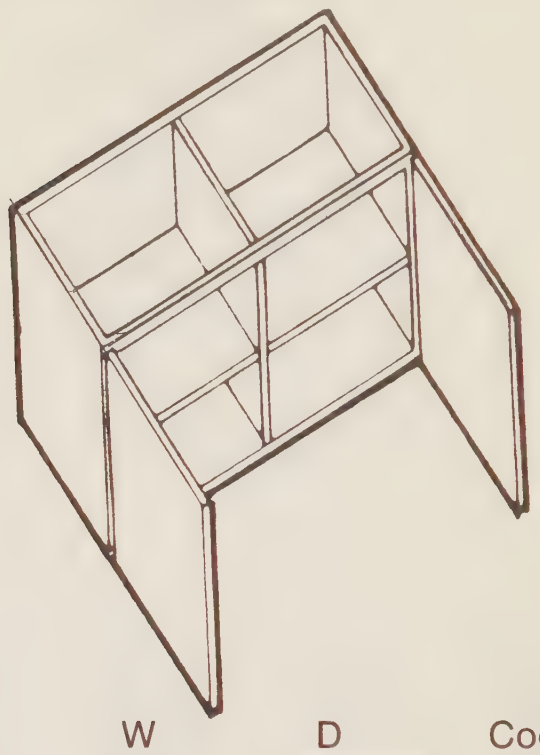

H	W	D	Code
550	600	300	D81
550	1000	300	D82
550	600	450	D79
550	1000	450	D80

- Corner carousel

H	W	D	Code
550	900	900	D83

- Unit with drop front hopper

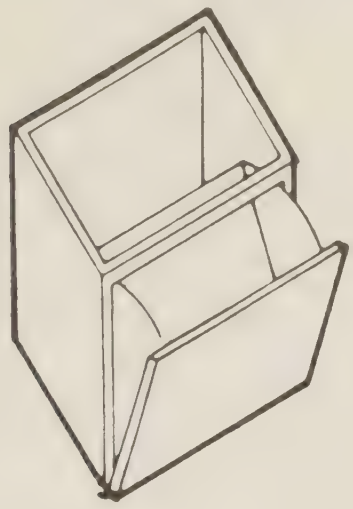

H	W	D	Code
550	500	450	D84
550	600	450	D85

- Unit with pull-out front and central double-sided support panel for tote boxes and other hook-on containers

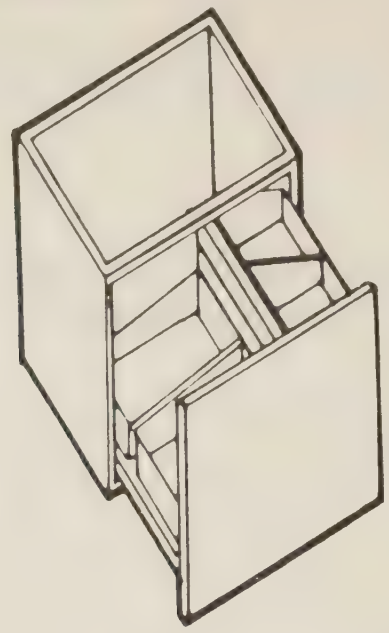

H	W	D	Code
550	500	450	D90
550	600	450	D91

- Unit with pull-out front and lift-out container

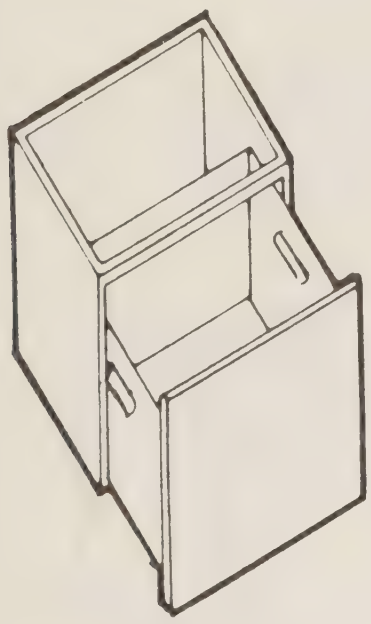

H	W	D	Code
550	500	450	D88
550	600	450	D89

- Unit with twin pull-out fronts and optional lift-out containers

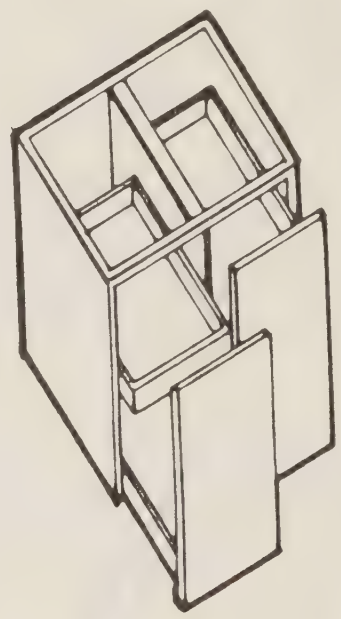

H	W	D	Code
550	500	450	D86
550	600	450	D87

- Single drawer unit

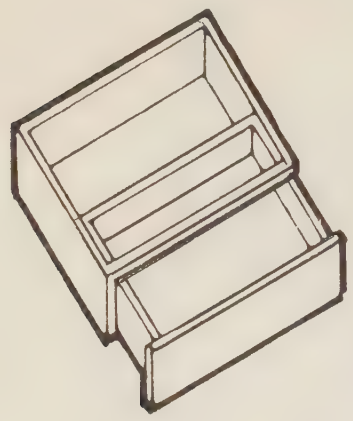

H	W	D	Code
150	500	450	D92
150	600	450	D93

- Two drawer units

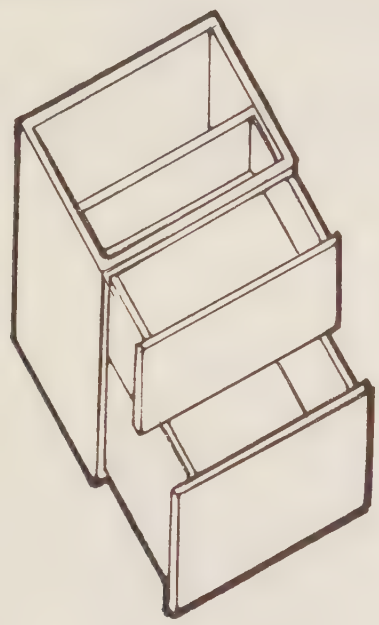

H	W	D	Code
550	500	450	D94
550	600	450	D95

These units comprise one 250 and one 300 high drawer.

- Two drawer units

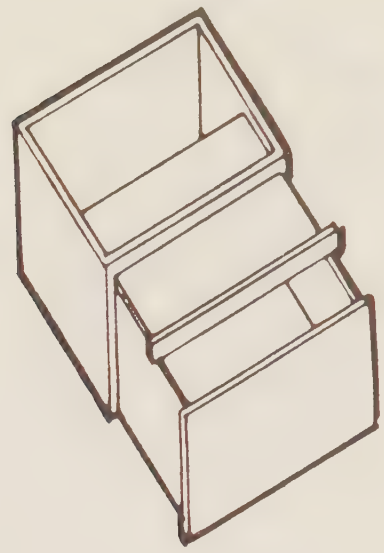

H	W	D	Code
150	500	450	D96
150	600	450	D97
350	500	450	D98
350	600	450	D99

150 units comprise one 50 shallow drawer and one 100 drawer. 350 units (as shown) comprise one 50 shallow drawer and one 300 high drawer.

- Three drawer units

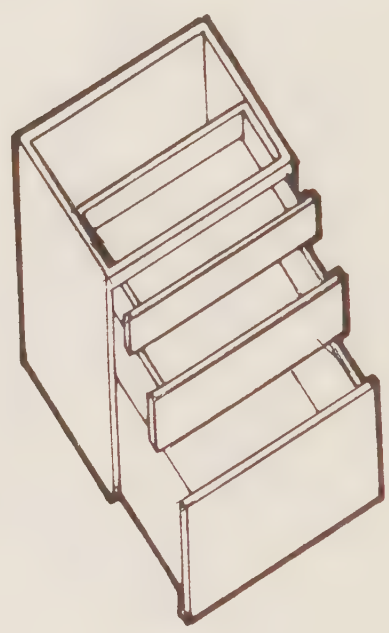

H	W	D	Code
350	500	450	D100/3
350	600	450	D101/3
550	500	450	D102/3
550	600	450	D103/3

350 units (as shown) comprise two 100 drawers and one 150 drawer.

550 units comprise 100, 150 drawers and one 300 drawer, which may be fitted with a filing frame.

- Four drawer units

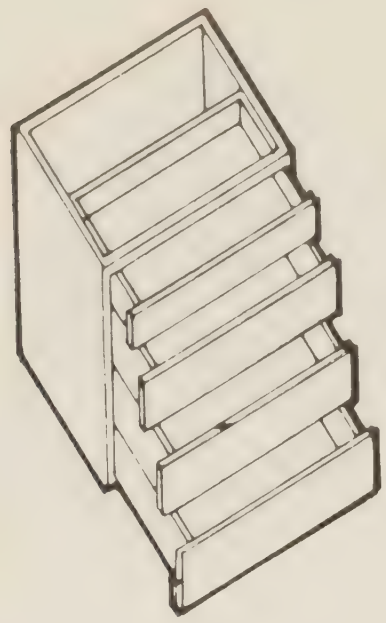

H	W	D	Code
350	500	450	D100/4
350	600	450	D101/4
550	500	450	D102/4
550	600	450	D103/4

350 units (as shown) comprise one 50 shallow drawer and three 100 drawers. 550 units comprise one 100 drawer, and three 150 drawers.

- Six drawer units

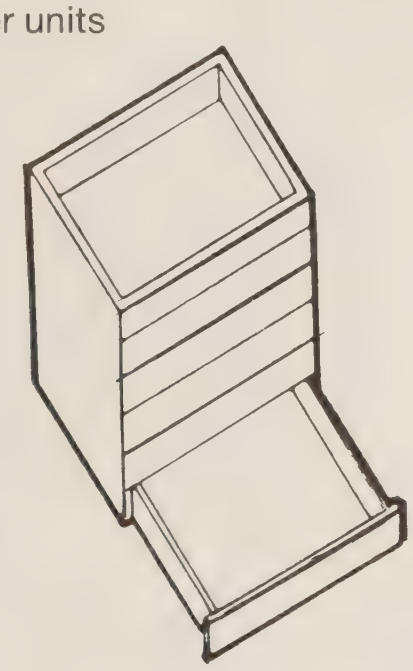

H	W	D	Code
550	500	450	D104
550	600	450	D106

Refer to manufacturers' product specifications for other possible combinations of 150, 350 or 550 carcase heights with 50, 100, 150 or 300 high drawers. Any 300 high drawers may be fitted with a filing frame.

- Multi drawer units

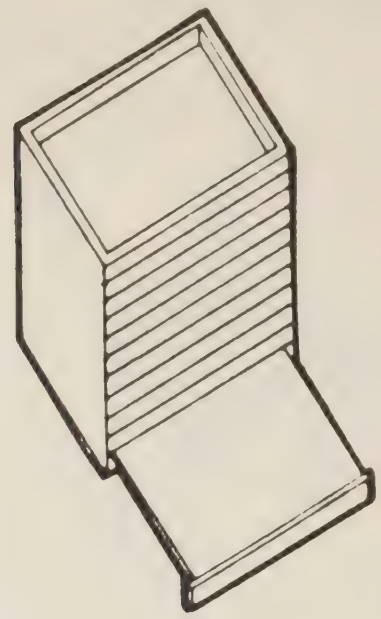

H	W	D	Code
550	500	450	D105
550	600	450	D107

Shallow drawers to project requirements.

Tall storage components

- Open shelf carcase with straight or sloping adjustable shelves and pack dispenser

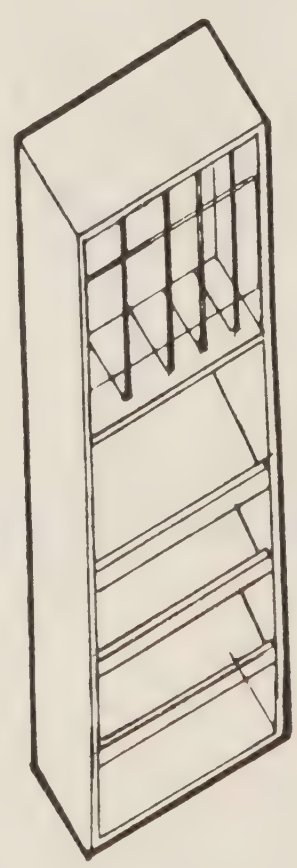

H	W	D	Code
1600	600	300	AD110

- Open shelf unit with adjustable shelves

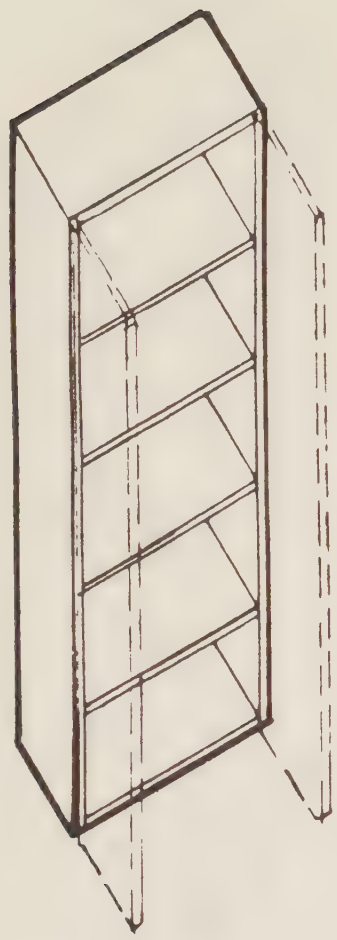

H	W	D	Code
1600	600	300	AD111

When used with bridging shelves can provide whole wall divided storage.

When provided with optional hinged doors, this unit is referred to as AD113.

- Wardrobe with shelf and hanging rail

H	W	D	Code
1600	600	300	AD112

A wardrobe unit with built in bed head mechanical and electrical services is included in HTM 68.

- Unit with pull-out front and lift-out containers or shelves

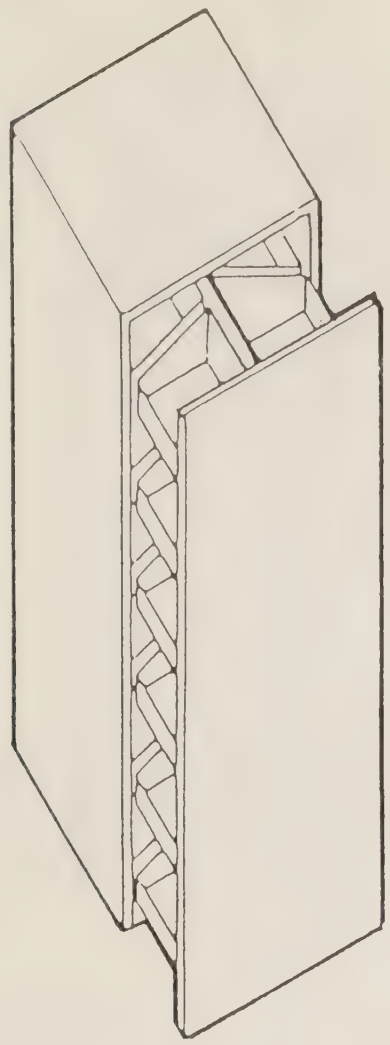

H	W	D	Code
1600	600	600	AE120

Refer to manufacturers' product data and design details for specification of:
- sliding gear for pull-out fronts
- lift-out and hook-on tote boxes.

- Cupboard with adjustable shelves

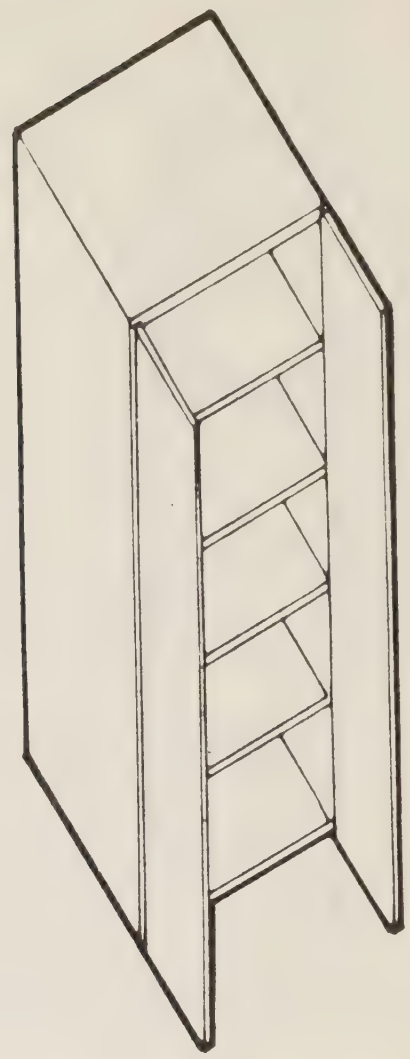

H	W	D	Code
1600	600	600	AE121

Accessories

Specify with appropriate storage unit.

- Filing drawer frames

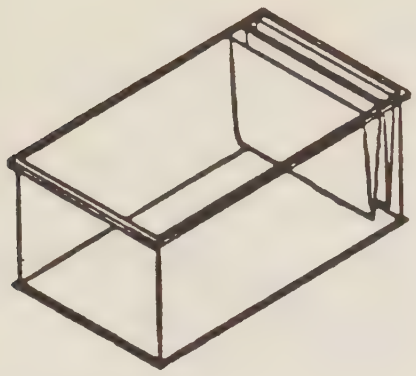

Dimensions to suit 300 filing drawer in 500 W and 600 W drawer units.

- Tote boxes

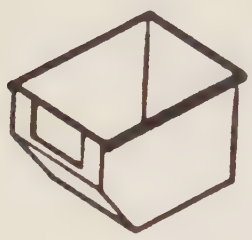

Available in various sizes. Dimensions and profile to suit support panels.

- Shallow trays

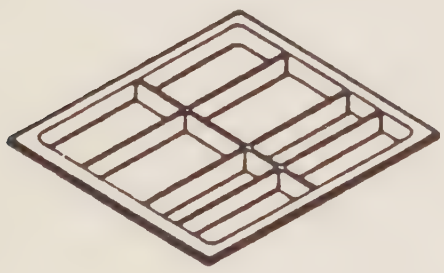

For use in 500 W and 600 W units.

- Catheter trays

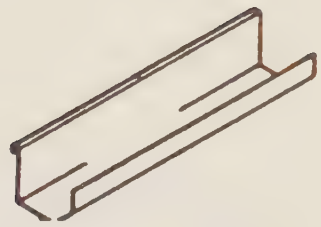

Available in a variety of lengths and profiles to hook onto support panels.

Staff base/Reception counter

This group of inter-related sub-components is primarily intended for assembly in a variety of staff base island layouts (see examples below) but can also be used to form reception, interview, appointment booking, and other work stations.

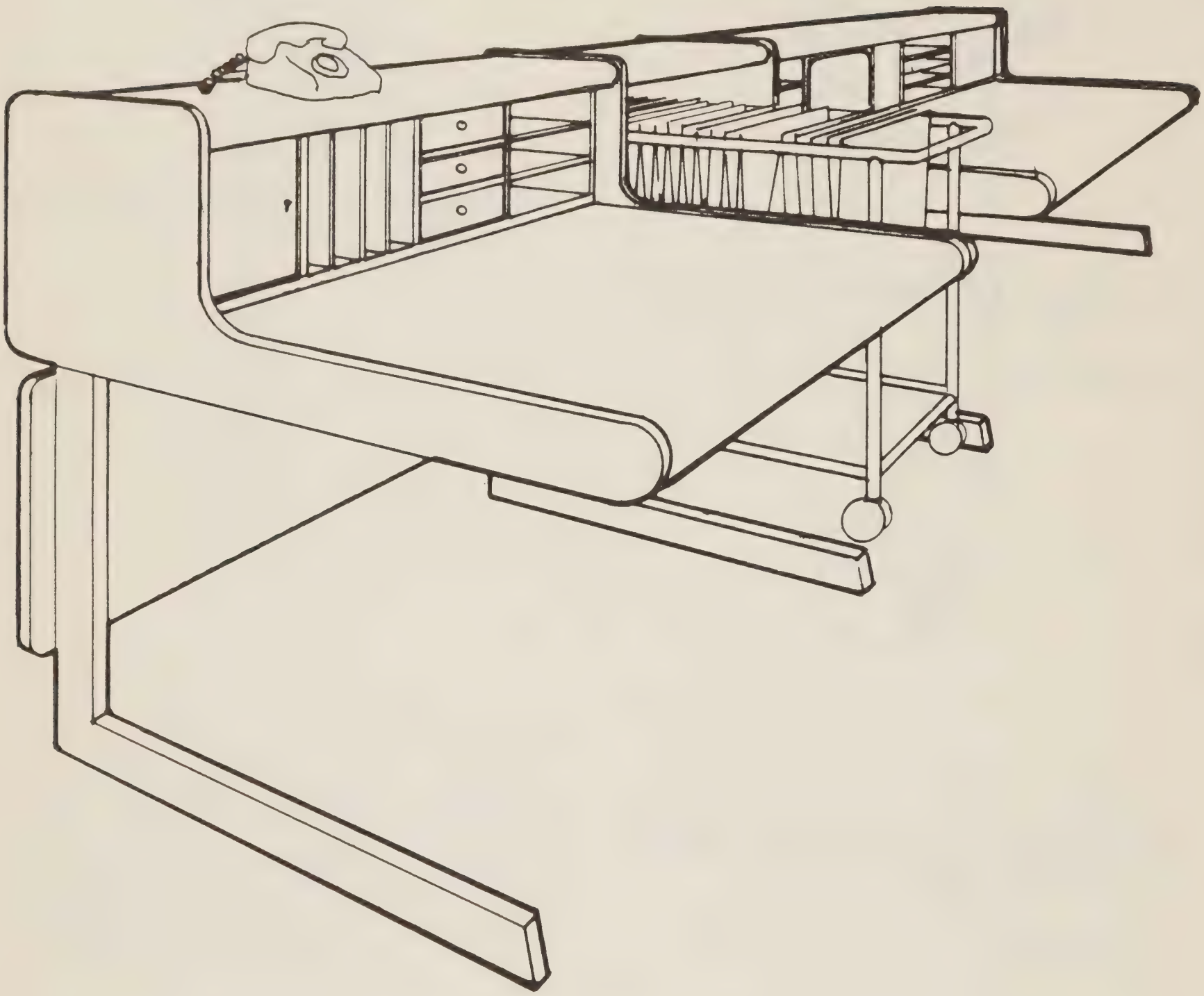

Figs 1, 2 and 3 show a typical two, three and four person assembly, allowing 800 mm (nominal) per person, comprising sitting and standing level worktops with storage console between the surfaces.

Electrical services etc. may be routed through leg supports.

Under bench mobile storage units of 550 basic height may be used in conjunction with staff base assemblies.

Typical assemblies

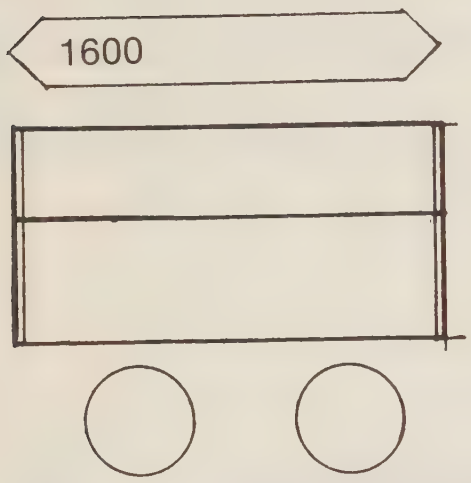

Fig. 1

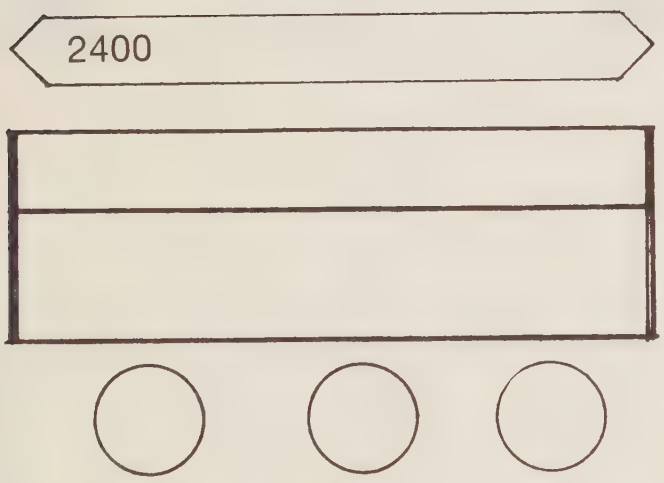

Fig. 2

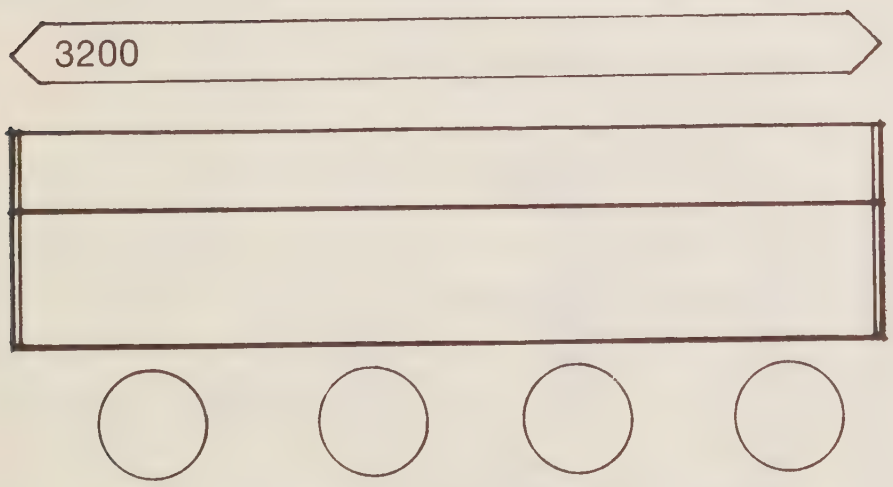

Fig. 3

The basic assembly can be expanded and used in a number of different staff base configurations with or without trolley park and bridge unit, some of which are illustrated below.

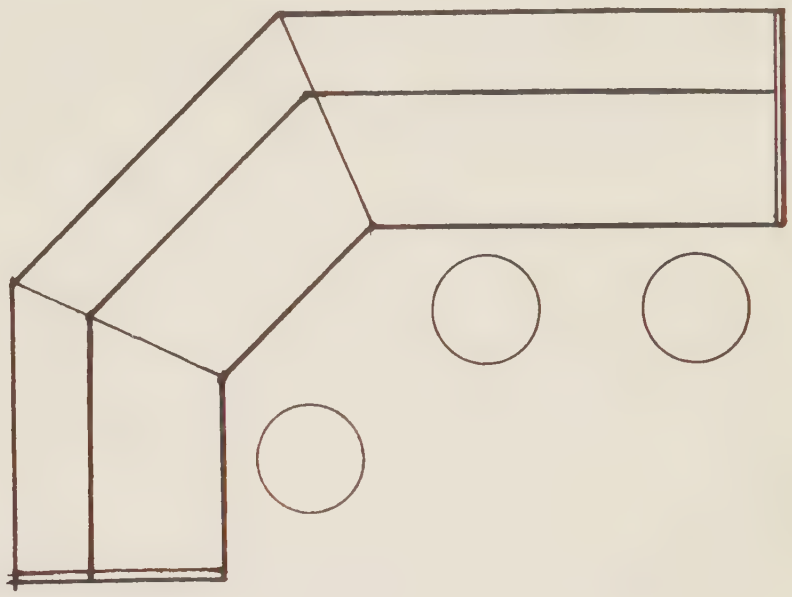

Fig. 4

Part of the console may be omitted to accommodate a visual display unit.

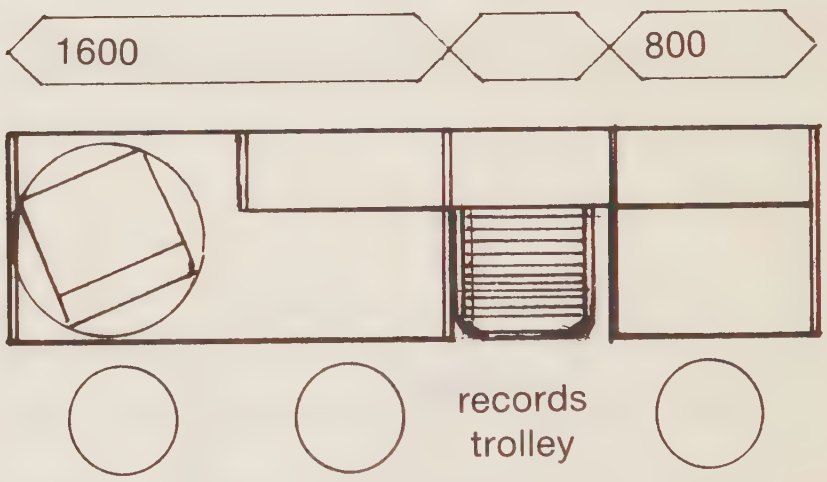

Fig. 5

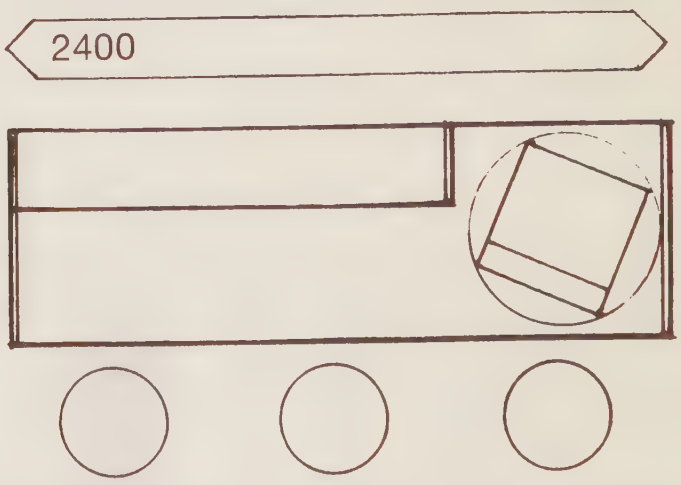

Fig. 6

Variations on 800 module console unit

The console basic 800 space shown in Fig. 7 will normally require sub-division for storage of paper etc, horizontally and/or vertically as indicated in Figs. 7 to 14. Division panels should be freely re-locatable by the users.

A nurse call indicator panel or visual display unit may be incorporated in the console assembly with back-up facilities elsewhere.

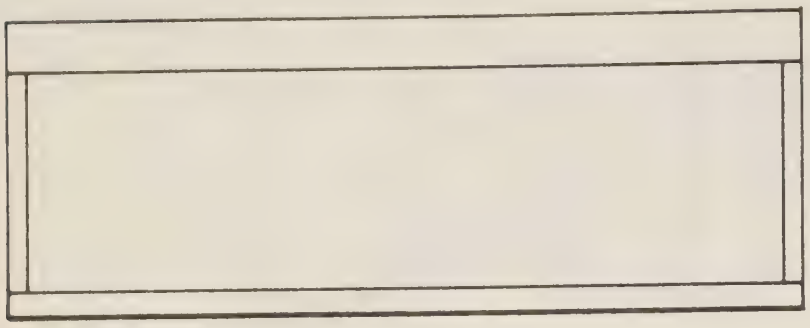

Fig. 7

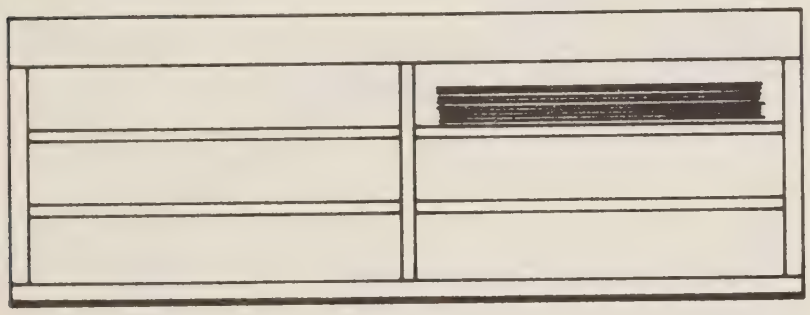

Fig. 8

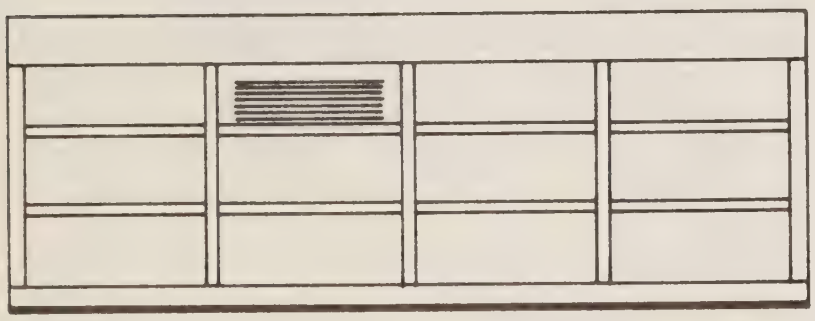

Fig. 9

Fig. 10

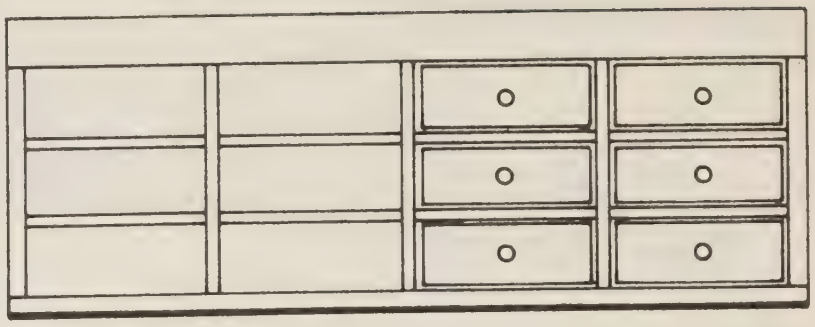

Fig. 11

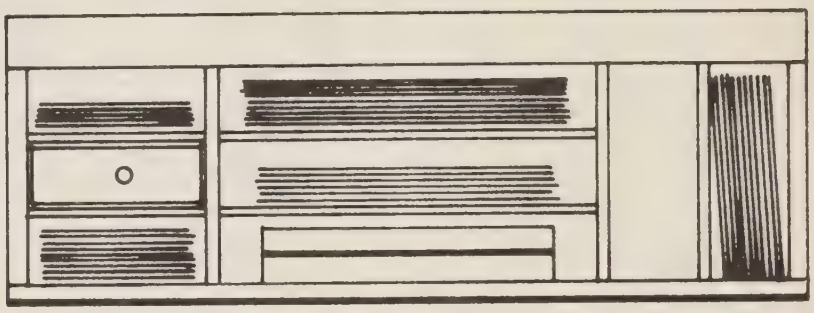

Fig. 12

Fig. 13 side hung doors

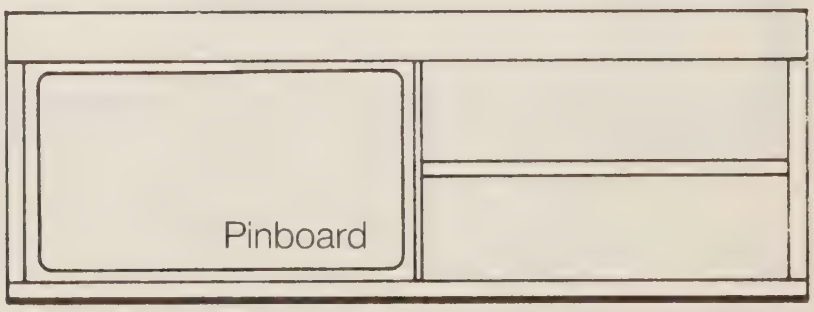

Fig. 14 sliding door

Figs. 15 and 16 show typical reception and interview desk arrangements which are combinations of the desk and console sub-components and builders work.

Fig. 15

Fig. 16

Figs. 17 and 18 give basic cross section dimensions and Fig. 19 is an exploded isometric of the parts of the system.

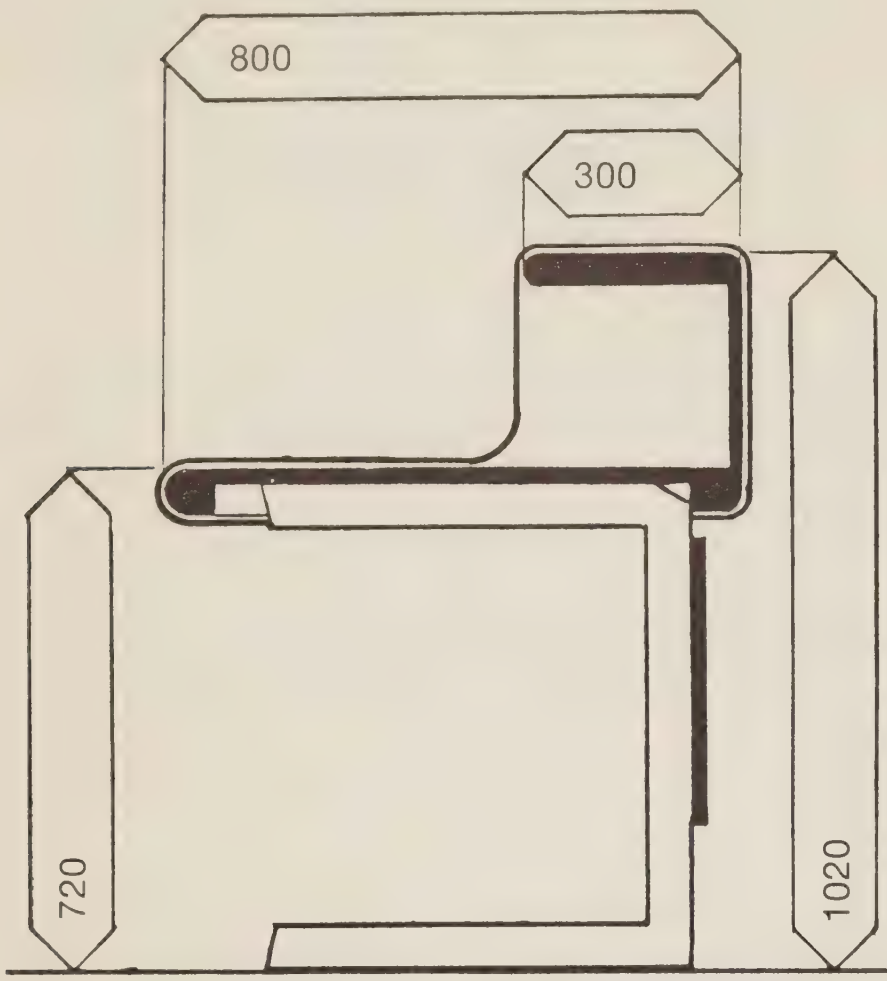

Fig. 17

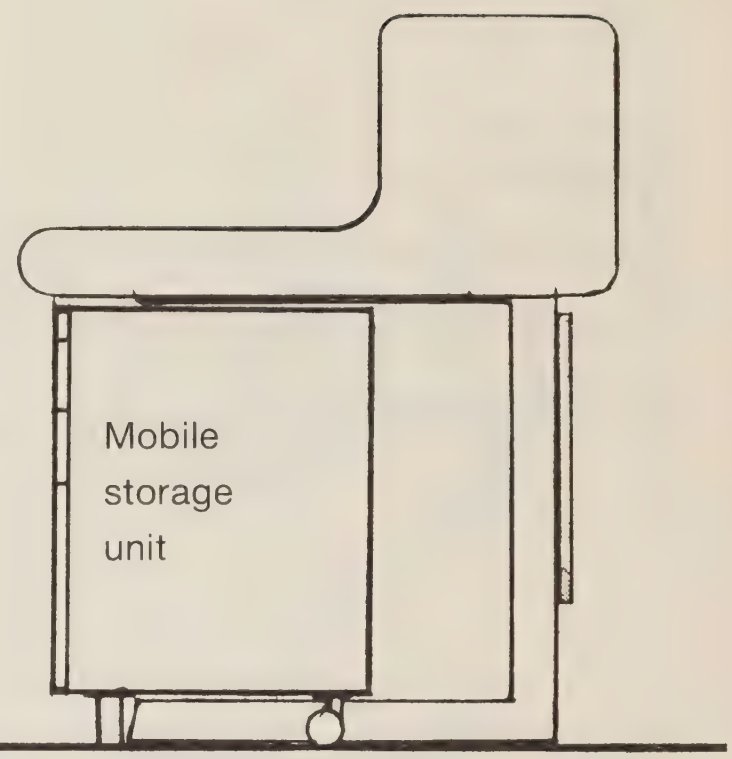

Fig. 18

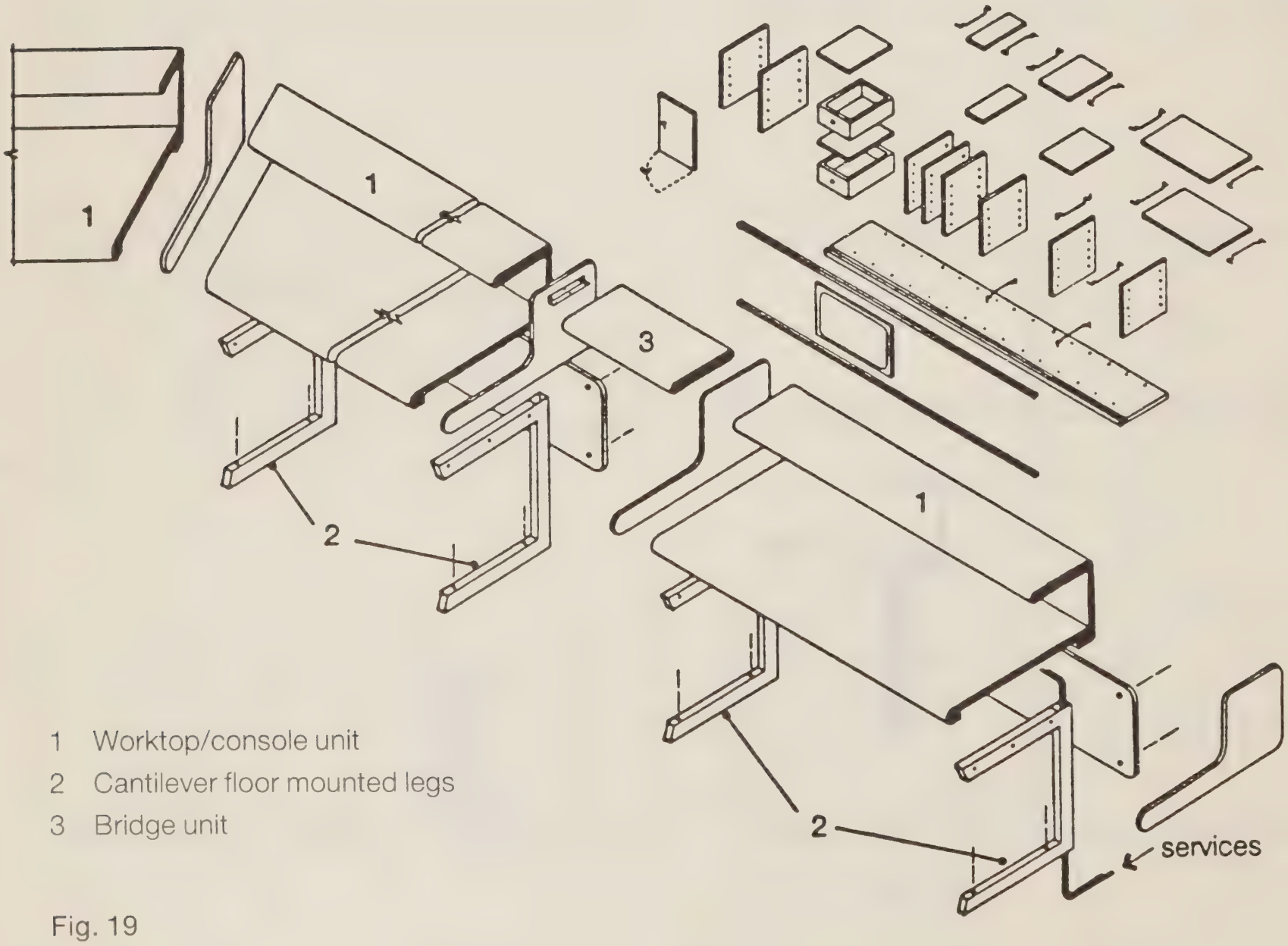

1 Worktop/console unit
2 Cantilever floor mounted legs
3 Bridge unit

Fig. 19

4 Performance

4.1 Strength

Open and closed storage, drawer units and shelves should be tested for strength by the methods described in BS 4875 Parts 5, 6, 7, and 8 simulating in-use conditions.

The various tests required for each of the test levels referred to above are set out in Appendix A.

Worktops should be tested by the methods and to the criteria listed in Appendix A.

The decision as to whether to use corbel carcases, cantilever brackets or leg supports for the whole or part of the installation should be determined after consideration of the load bearing capacity of the assembly and its fixings and the construction of the wall or partition to which the units are to be fixed.

Safe working loads should be determined for the corbel carcases or cantilever brackets mounted on the appropriate partition and where these are unlikely to meet the loading requirements of the installation, alternative support systems should be used.

In new hollow plasterboard partitions timber members fitted within the cavity will provide safe working load capacity. See HTM 56 for details of heavyweight fixings.

Extra care should be taken with installations to be mounted on existing hollow plasterboard partitions without timber noggings as these may be suitable for leg supports or 'C' frames only.

Safe working loads for installations mounted on masonry walls and partitions will depend upon the type and condition of the masonry and the condition and thickness of plaster or other facing materials, and fixing device used.

Users should make a careful assessment of local conditions and carry out loading tests to determine safe working loads for installations.

Refer to manufacturers' product data for details of cantilever brackets and the loads that they can sustain. Users are advised to seek test certification from manufacturers as to safe working loads achieved by their products under test conditions and recommended methods of fixing to walls and partitions and type of fixing devices used under test.

4.2 Surface finishes

Surface finishes of components fabricated from wood, or wood based materials, should be tested by the methods described in BS 3962, under the following Part numbers and heads.

- Part 2 – wet heat
- Part 3 – dry heat
- Part 4 – marking by liquids
- Part 5 – oils and fats
- Part 6 – mechanical damage

Generally surface finishes should be specified as requiring a 'severe' rating under BS 6250 Part 3; and only exceptionally as 'general' (e.g. linoleum faced worktops for desk type activities).

Appendix A sets out the recommended ratings, which are more stringent for horizontal surfaces than for vertical surfaces.

These criteria are set out in a table on page 34.

Finished surfaces should be smooth and free from application marks.

Plastic laminates should be specified in accordance with BS 3794 Part 1, and tested in accordance with Part 2 of that BS.

The surface finish of stainless steel components should be specified as 'No 3B polished dull buffed' as set out in Table 3 of BS 1449, Part 2.

Linoleum for worktops should be to BS 810 without additional finish.

All mild steel components must be treated to be corrosion resistant.

4.3 Surface spread of flame

When tested in accordance with BS 476 Part 7, painted and lacquered surfaces should achieve a minimum of Class 4, and melamine veneered surfaces Class 3.

4.4 Ironmongery and fittings

The performance of individual fittings should comply with relevant British Standards (see appendix A and B).

Castors fitted to mobile units should comply with the Castor Manufacturers Association - Furniture Industry Research Association "Performance tests requirements for furniture castors".

Hinges should permit doors to open through 270°.

All fittings should be corrosion resistant.

5 Design application

5.1 Co-ordination with building and engineering design

It will be vitally important to ensure that walls and partitions are capable of taking the cantilevered loads imposed by the system and allow for the appropriate fixing of the corbel carcases, cantilever brackets and bearers. Depending upon the specification and design of brackets offered by manufacturers, it may be necessary to specify timber noggings or metal plates in hollow plasterboard partitions to prevent deflection of the plasterboard, (see 4.1).

The majority of engineering services terminals will fall conveniently within the mid storage zone, and others such as cleaners' sockets and plug-in connections to refrigerators in the lower storage zone, can be located above skirting level in the floor clearance zone between cantilever brackets.

5.2 Designing layouts

Maximum emphasis should be placed on open access to storage at working height, as this is both functionally and cost effective, and reduces requirements for labelling to a minimum.

Consideration should be given to the location of upper storage units to obviate inaccessible voids at internal corners.

Corners can be turned by the use of mitred worktops and at internal corners by the use of the lower storage corner carousel illustrated on page 17.

The principle of cantilever support of worktops and lower storage components, entirely dissociates the latter from the function of worktop support, and enables the provision of lower storage to be considered entirely on its merits.

Lower storage units have been located 300 above finished floor level for ergonomic reasons and to facilitate the unobstructed use of floor cleaning machines.

Plinths have been eliminated to avoid inaccessible spaces which provide harbourage for insects, to simplify floor finishes and facilitate change of use.

5.3 Project documentation

Storage and worktop units should be enumerated and fully described in the Bills of Quantities. A 1:50 General Arrangement layout should be used to show references of the units and worktops. The broadsheet of range of units should be provided. Assembly and fixing details should be provided.

The following should be covered:–

- References or codes of all units.
- Worktops, where incorporating sinks, drainers, hoppers or plaster sinks should be fully described.
- Methods of support – corbel carcases, cantilever brackets, legs or 'C' frames.
- Angle supports at rear of worktops.
- Finishes – particularly specials – e.g. veneered doors or drawer fronts.
- Ironmongery – locks, handles.
- Builders work – fixings, noggings in hollow partitions, special fixing devices.
- Junctions with walls – sealants etc.
- Services – connections to wastes, water services, electrical services, earthing devices, taps, plugs and chains, etc.
- If units are to be supplied and fixed by the manufacturer then a list of at least 3 firms should be included in the Bills and the main contractor instructed to obtain competitive tenders. The successful manufacturer then becomes a "domestic subcontractor" to the main contractor.
- Quality sample units should be inspected and agreed before production commences.
- Compliance with the tests and standards in Appendices A and B should be verified.

6 Site practice

6.1 Sequence of work

Fitted storage systems are generally procured as Group 1 components ie supplied and fixed as part of a building contract.

The components should be delivered and installed as late as possible in the building programme. The sequence should be carefully planned and deliveries co-ordinated with the programme so that components may be installed and protected without delay.

Pre-planning and accuracy in setting out support components will be of particular importance for components involving co-ordination with engineering services, eg staff base, ward drugs cupboard and sinks.

Where leg supports or 'C' frames are used they should be installed after floor finishes have been laid.

6.2 Fixing

Refer to manufacturers product specifications for details of fixing devices. The type selected will depend on the construction of the supporting wall or partition and will include:

- wood screws of appropriate gauge and length for screwing to timber studs or noggings
- plugs and screws for fixing to solid masonry
- 6 mm diameter cavity fixing devices for fixing to hollow pot or block partitions
- 6 mm diameter proprietary metal cavity fixing devices for fixing to hollow plasterboard partitions.
- a continuous steel angle or timber batten fixed to partition for supporting worktops and corbel carcase units.

At the time of writing there are four support systems available: the bracket, the leg, the 'C' frame and the corbel carcase unit. These need to be matched to the partition systems in use.

In the case of the first three bracket, leg support and 'C' frame, the worktop and the carcase is fixed to the underside of the worktop. In the latter case the corbel carcase unit is fixed to the wall and provides support for the worktop.

Storage components at intermediate and high level are fixed back direct to the partition/wall.

Drug and medicine cupboards should be fixed to partitions in accordance with the requirements of BS. 2881.

Of the partition systems in common use in health buildings brickwork will provide the best support for storage components and plasterboard/metal stud the least effective. From this it will be obvious that the maximum safe loading of storage components will depend on the partition system selected.

However using the appropriate support methods, fixing devices and reinforcement for plasterboard partitions, all types of partition construction can support the cupboard units.

Designers/users are recommended to give consideration to the following:

Solid brickwork and blockwork – all support systems are suitable using appropriate fixing devices

Lightweight blocks (eg Thermalite) – all support systems are suitable, but special fixing devices for use with lightweight blocks should be used.

Plasterboard/metal stud partitions – all support systems are suitable, but special attention should be paid to fixing arrangements and it may be necessary to limit load.

Where heavy items need to be stored eg bulk paper, consideration should be given to the use of industrial storage systems.

Fixings for worktop support rails/angles should be made into metal studs in addition to plasterboard skins.

In new work, timber studs independent of, or adjacent to metal studs will provide a suitable fixing and increase the loading capacity of the partition.

Legs may be necessary at free end locations to support worktops. They can be used in conjunction with both bracket and corbel carcase systems.

Corbel carcases should have back rails, particularly one at the bottom, to prevent carcase side cheeks indenting plasterboard faces.

Cavity fixing devices appropriate to the thickness of the plasterboard skins should be used.

Junctions between abutting worktops and between worktops and walls should be sealed with an appropriate sealant.

Appendices

A Performance tests

Performance ratings and test levels

Storage components in this HTM should comply in general with the requirements of BS 6250 Part 3 and BS 4875 Parts 5, 6, 7 and 8.

Performance tests to which components should comply are set out below, and specifiers are advised to seek certification or other evidence of compliance with these tests.

Summary of test procedures for storage units

BS4875 para no.	Title	Requirement
6.1.2 (pt 7)	Strength of shelf support	See tables 3 and 4, test level 4.
6.1.3 (pt 7)	Deflection of shelves	See table 3, test level 4.
6.1.4 (pt 7)	Strength of cabinet top and bottom surfaces	
	Units with headroom greater than 1050 mm	Force in N 1,000
	Units with headroom less than 1050 mm	Force in N 450
6.1.5 (pt 7)	Strength of clothes rail supports	See table 3, test level 4.
6.1.6 (pt 7)	Deflection of clothes rails	See table 3, test level 4.
6.2.2 (pt 7)	Strength of pivotted doors	Test load in kg 40
6.2.3 (pt 7)	Wear and fatigue of pivotted doors	See table 1, test level 4.
6.2.4 (pt 7)	Slam open/shut of pivotted doors	See table 1, test level 4.
6.3.2 (pt 7)	*Wear and fatigue of sliding doors	See table 1, test level 4.
6.3.3 (pt 7)	*Slam open/shut of sliding doors	See table 1, test level 4.
6.4.2 (pt 7)	*Strength of flaps	See table 1, test level 4.
6.4.3 (pt 7)	*Wear and fatigue of flaps	See table 1, test level 4.
6.5.2 (pt 7)	Slam open/shut of roll fronts	See table 1, test level 4.
6.5.3 (pt 7)	Wear and fatigue of roll fronts	See table 1, test level 4.
6.6.2 (pt 7)	Strength of runners	Test load in kg 40.
6.6.3 (pt 7)	Slam open and slam shut of drawers	See table 1, test level 4.
6.6.4 (pt 7)	Displacement of bottom surface of drawers	See table 1, test level 4.
6.6.5 (pt 7)	Wear and fatigue of drawers and runners	See table 1, test level 4.
6.7.2 (pt 7)	Strength of wall attachment devices	2 x test level 4, table 3.

* These tests are appropriate for up and over doors.

Summary of tests for worktops (including desks and cupboards below 1050 mm high)

BS 4875 para no.	Title	Requirement
6.1 (pt 5)	Vertical static load	See table 1, test level 4.
6.2 (pt 5)	Sustained load test	See table 1, test level 4.
6.3 (pt 5)	Horizontal static load (staff base only)	See table 1, test level 4.
6.4 (pt 5)	Vertical impact test	See table 1, test level 4.
6.6.2 (pt 5)	Horizontal fatigue (staff base only)	See table 1, test level 4.
6.6.3 (pt 5)	Vertical fatigue tests for worktops	See table 1, test level 4.

Test programme

Testing ranges of components

The following tests constitute a minimum test programme to cover the whole range of components.

The largest lower unit and the largest wall unit. (If this does not include the longest shelf span then the unit containing this item shall also be tested.)	Test No. 6.1.2, 6.1.3, 6.1.4, 6.1.5, 6.1.6 and 6.7.2 of BS 4875 part 7.
The largest worktop plus the largest bridging worktop (if any) or the largest worktop (if any).	Test No. 6.1, 6.2, 6.3, 6.4 and 6.6.3 of BS 4875 part 5.
The largest drawer for each type of runner system fitted.	Test No. 6.6.2, 6.6.3, 6.6.4 and 6.6.5 of BS4875 part 7.
The relevant door the geometry of which creates the greatest bending moment on the hinge (for each type of hinge used).	Test No. 6.2.2, 6.2.3 and 6.2.4 of BS 4875 part 7.
The largest sliding door*.	Test No. 6.3.2 and 6.3.3 of BS 4875 part 7.
The largest roll front (tambour door)*.	Test No. 6.5.2 and 6.5.3 of BS 4875 part 7.

*If applicable.

Sequence of testing

Groups of tests on specific components shall be carried out in the sequence specified in table 6, but it is not necessary to test the components of the units in any set sequence, except Test No. 6.7.2 (strength of wall attachment devices) which should be carried out at the end of the programme.

Sequence of tests

Component	British Standard	Test Sequence
Pivotted doors	BS 4875 pt 7	6.2.2, 6.2.3, 6.2.4
Sliding doors	BS 4875 pt 7	6.3.2, 6.3.3
Hinged flaps	BS 4875 pt 7	6.4.2, 6.4.3
Drawers	BS 4875 pt 7	6.6.4, 6.6.3, 6.6.2, 6.6.5
Shelves	BS 4875 pt 7	6.1.2, 6.1.3
Roll front closures	BS 4875 pt 7	6.5.2, 6.5.3
Worktops	BS 4875 pt 7	6.1, 6.2, 6.3, 6.4, 6.6

Test criteria for surface finishes (based on BS 6250 pt 3).

Additional tests for mobile storage units

BS4875 para no.	Title	Requirement
6.2 (part 6)	Vertical stability test	Force 500N
6.3 (part 6)	Horizontal impact test	

Test criteria for surface finishes

surface resistance to:	test method	minimum performance rating	
		Plastic laminate worktops	All exposed surfaces of cupboards and shelves
Wet heat:	BS 3962 Part 2		
55°C		4	2
70°C		4	2
85°C		4	—
Dry heat:	BS 3962 Part 3		
85°C		3	3
100°C		3	2
160°C		3	—
Cold liquids:	BS 3962 Part 4		
acetone		5	2
butyl acetate		5	3
toilet spirits		5	3
potable spirits		5	3
tea		5	4
coffee		5	4
disinfectant (phenol)*		5	3
disinfectant (chloro)*		5	3
paraffin oil*		5	3
blackcurrant juice*		5	3
ammonia solution*		5	3
acetic acid* (4.4% solution)		5	3
olive oil*		5	3
Cold oils and fats	BS 3962 Part 5	5	—
Mechanical damage:	BS 3962 Part 6		
Scrape, surface penetration		5	3
Scrape, penetration to substrate		5	5
Impact		5	3
Cross-cut test		—	3

*Using the specification for these liquids given in BS 5910: Part 1

Flexible rating allowances: test results for any sample may include two failures of one rating point.

Surface texture:
The surfaces of the unit shall be smooth with an even film thickness of the specified finish throughout.

Materials used for linoleum and stainless steel worktops should be in accordance with the British Standard Specifications set out on page 35.

Specifiers should note that while stainless steel will have a resistance to heat well in excess of the above requirements it may be adversely affected by some liquids, particularly bleach.

B Supplementary specification and design data

Materials and finishes for components

Materials/finishes listed below are preferred solutions. Other suitable finishes, such as plastic laminate or veneer may be used where appropriate.

Cupboards and drawer carcases
- medium density fibreboard with pigmented acid catalyst finish to all exposed surfaces inside and outside.

Side hung doors/drawer fronts
- medium density fibreboard with pigmented acid catalyst finish to all exposed surfaces inside and outside.

Drawer bottoms and cupboard backs
- duo-faced hardboard/medium density fibreboard

Worktops
- stainless steel
- high density chipboard with post-forming grade laminate finish
- high density chipboard with linoleum finish.

Specification references for materials and finishes listed above

BS 810: Sheet linoleum, cork carpet and linoleum tiles.
BS 1142 Part 2: Standard and tempered hardboard.
BS 1186 Parts 1 and 2: Timber for and workmanship in joinery
BS 1449 Part 2: Stainless steel and heat resisting steel plate, sheet and strip.
Type 304 S16 stainless steel sheet finish No 3 B polished dull buff.
BS 3794 Parts 1 and 2: Post forming grade laminate.
BS 5669: Specification for wood chipboard and methods of test for particle board:
Type I for linoleum finish. Type III (moisture resistant) for laminate finished worktops.
Medium density fibreboard of 750 kg/m^3 minimum density is available in standard and moisture resistant grades.

Stainless steel worktops with or without sinks etc to be min. 16 swg (or 18 swg where press formed) with adequate stiffening, and to comply with HTM 64.

All surfaces of units shall have a flat true and smooth finish.

General notes

Experience has shown that melamine coatings and plastic foil edgings to chipboard are not suitable for use in health buildings.

Mild steel for carcases, shelves, etc, should be avoided because of the danger of corrosion. Mild steel hinges and fixings may be acceptable if suitably rust proofed.

The final choice of materials and finishes must be the responsibility of the specifier, based on test proven performance, availability, and cost.

Laminate only end facings to worktops are not suitable for health buildings.

Ward drugs cupboard

The ward drugs cupboard described below is currently in use in the NHS and should comply with security level 1 as set out in BS 2881.

The cupboard should be fitted with a removable electrical shelf containing light(s) to illuminate the interior of the cupboard, an indicator light visible from the front when the door is closed and an electrical connection box. When installing or removing the cupboard this shelf should be removed to allow access to the electrical connection.

Below the electrical shelf the cupboard is divided into two compartments. One lower compartment is fitted with a second door hinged on the central divider and of the same hand as the outer door.

Each door should be fitted with a lock, the keys to which must differ so that the key which operates the outer door will not operate the inner door.

Locks should be in accordance with BS 2881 capable of at least 1000 differs and when tested in accordance with BS 3621 shall withstand 60,000 operations. Escutcheon plates will be required to locks on doors with a lacquer finish.

Electrical performance

The cupboard should be wired in accordance with the current edition of the IEE regulations. All electrical fittings should comply with the appropriate BS specifications.

Electrical services should be in accordance with DHSS Eng 442 Ref MDB/Eng/14. (see pages 37 and 38).

Fixing instructions

The electrical feed should emerge from the wall in the centre of the proposed position of the cupboard and 1700 mm above floor level.

The cupboard should be fixed as follows:

- remove the electrical shelf to reveal the cable entry hole in the back of the carcase
- drill four pilot holes through the back to mark the wall
- remove the cupboard and drill and plug the wall four times with suitable plugs
- remount the cupboard, thread the wires through and screw the cupboard to the wall with four 10 gauge woodscrews or similar sized fixings
- connect the wires to the terminals in the connector box in the electrical shelf and replace the shelf.

Ward drugs cupboard general arrangement
(Type A19R illustrated)

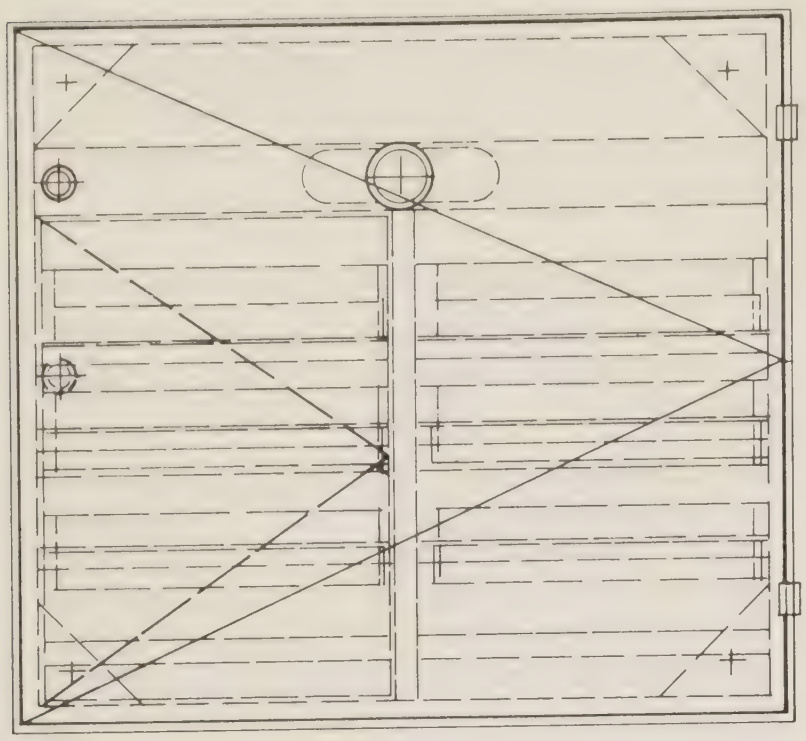

elevation

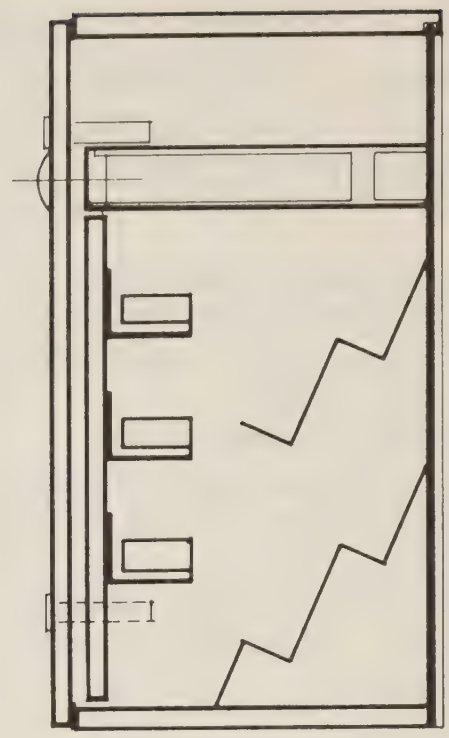

vertical section

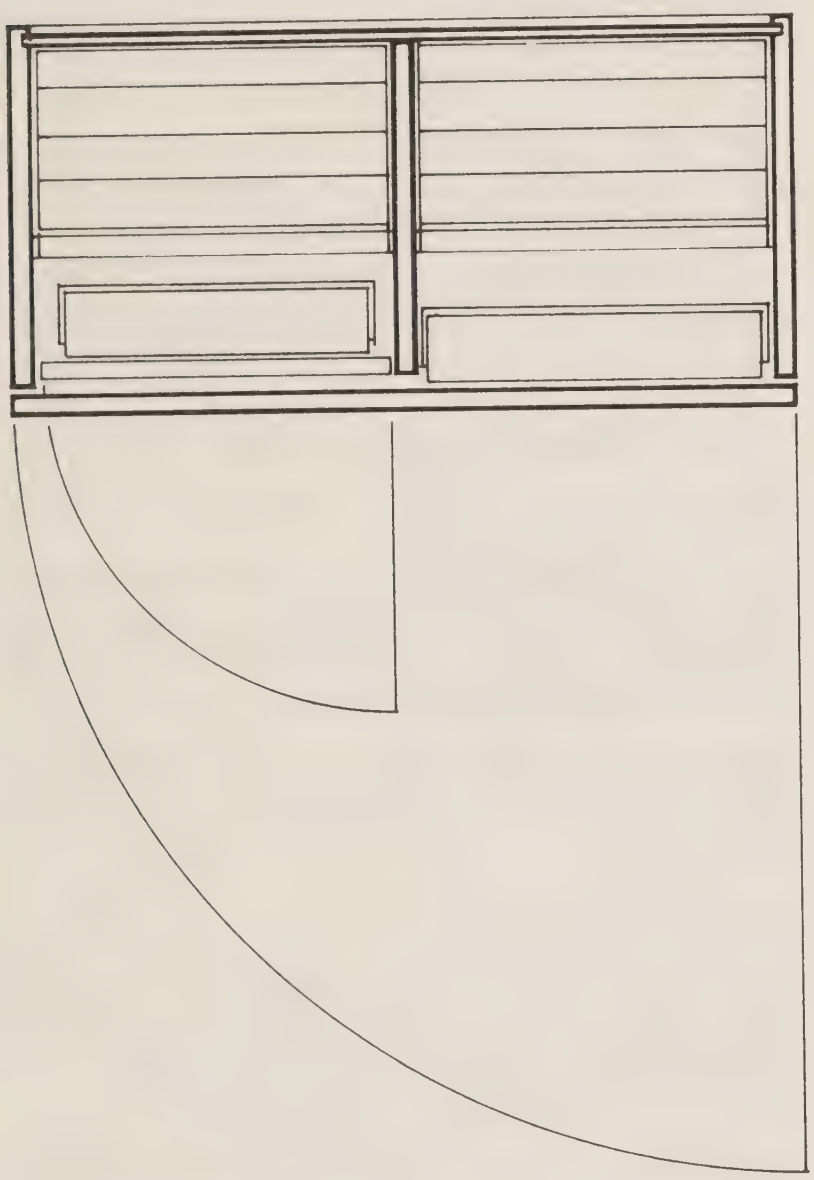

plan section

DHSS Specification of electrical services to ward drugs cupboard

Regulations

All materials and components of the ward drugs cupboard shall comply with the latest requirements of the Regulations for the Electrical Equipment of Buildings as issued by the Institute of Electrical Engineers, British Standards Specifications (to include all relevant amendments) and the relevant parts of Electrical Safety Code for Hospital Laboratory Equipment, insofar as the correct operation is not at variance with any of these requirements.

Operation

Electrical services to the ward drugs cupboard shall provide the following facilities:

- Illumination of shelf areas automatically when the door is opened.
- Indication on the cupboard (and remotely) that the cupboard is open.
- Continuous power supply indication on cupboard to show that the circuit is functioning.

The internal illumination and 'cupboard open' indication shall be a function of one lamp, controlled by a door operated switch. The lamp holder shall be mounted within the front edge of the hollow shelf enclosed by an opal plastics cover (allowing illumination to the upper and lower sections of the cupboard) behind a translucent red dome lens mounted in the cupboard door.

The power supply indicator lamp shall be fitted within the front edge of the shelf behind a translucent green dome lens in the cupboard door.

Wiring

Wiring shall be 0.75 mm^2 PVC insulated, flexible cables complying with BS 6500 table 16, concealed within the hollow shelf. At the position where connections are to be made to the building and remote indication wiring a hole large enough to prevent chafing of cables is to be provided in the rear of the shelf.

Cabling at the back of the cupboard shall consist of two 400 mm lengths of 0.75 mm^2 PVC insulated, PVC sheathed flexible cables to be connected to the wiring of the building. One of these cables shall provide the incoming service to the cupboard, and the other for connection to a remote indicator, both shall be fully identified and connected to the relevant terminals of the terminal block.

Terminal block

A suitable terminal block containing four terminals shall be provided within the hollow shelf to terminate all connections. The terminals shall be of the pinch screw type and of adequate capacity to securely connect all the strands of all conductors. Each terminal shall be identified as to its use.

Door switch

One micro-switch with an assessed quality to BS 9562 activated by the opening of the outer door shall be fitted in the front edge of the hollow shelf. The switch shall operate the interior/indicator lamp within the cupboard. The spring operation of the switch to be of sufficient strength to force the door to the obviously open position and operate the internal light.

Interior/indicator lamp

One type B15 lamp holder to BS 5042 and a 15 W lamp having a bayonet cap complying with BS 5101 Part 1 1975 to be fitted within the front edge of the hollow shelf behind a translucent red dome lens in the outer cupboard door. The lamp to be enclosed behind an opal plastics cover which shall incorporate sufficient provision for the ventilation of the lamp.

'Power on' indicator lamp

One filament type lamp shall be fitted within the front edge of the hollow shelf behind a translucent green lens, the lens shall be of sufficient dimensions that the indication light is visible when the outer door is closed.

Terminals

All terminals, or any other live part, are to be covered or so protected that they cannot be inadvertently touched.

Earthing

All metal parts and items of electrical equipment shall be efficiently bonded to earth potential. An earth terminal shall be provided as one of the four terminals on the terminal block to which the systems earth of the building shall be connected. An additional core shall be included in the mains cable connection for earthing purposes.

Ward drugs cupboard wiring diagram

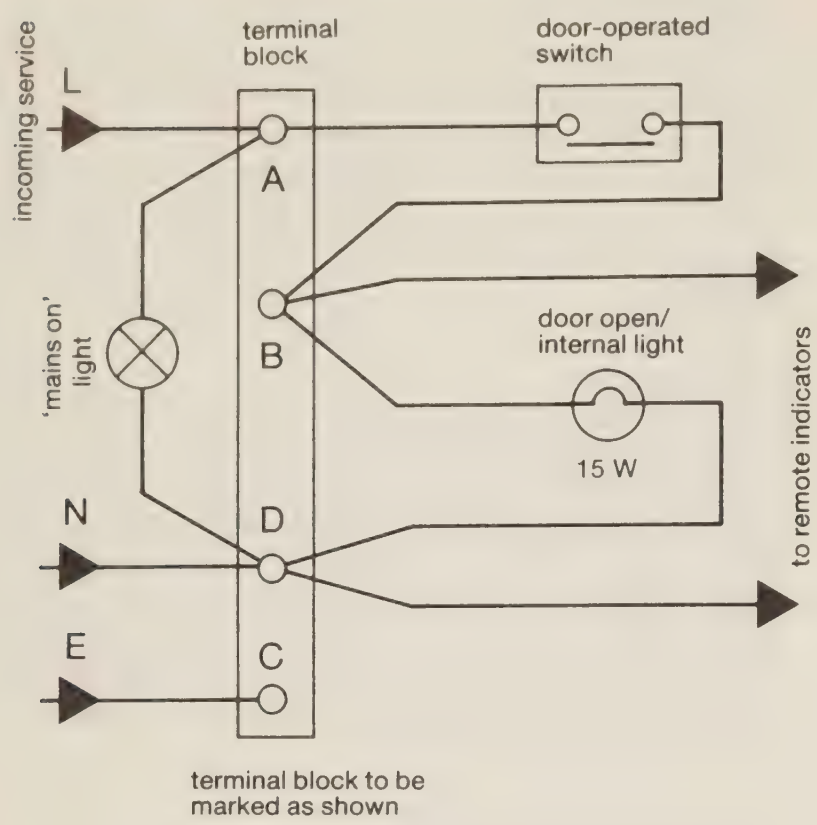

Notes:

1 All cables to be 0.75 mm^2 PVC insulated PVC sheathed.

2 All exposed metal of equipment to be connected to earth terminal 'C' of terminal block (connections not shown).

References

Other Health Technical Memoranda
56 Partitions
62 Demountable storage system
64 Sanitary assemblies

Other DoH data
Activity Data Base
Ergonomic data
Health building notes
Details of Staff Base system
Fitted storage system – model working drawings

Statutory legislation
The Building Regulations
Model Water Byelaws
Byelaws of the Statutory Water Undertakers
Water Act 1973
I.E.E. Regulations
Medicines Act 1968
Misuse of Drugs Act (Safe Custody) Regulations 1973

British Standard Specifications and Codes of Practice
BS 476 Part 7: Surface spread of flame
BS 810 Sheet linoleum, cork carpet and linoleum tiles
BS 1142 Fibre building boards,
Part 2: Medium board and hardboard
BS 1186 Timber for and workmanship in joinery
Part 1: Specification for timber
Part 2: Quality of workmanship
BS 1449 Steel plate, sheet and strip,
Part 2: Stainless and heat resisting steel plate, sheet and strip
BS 2881 Specification for cupboards for the storage of medicines in health care premises
BS 3621 Thief resistant locks
BS 3794 Decorative laminated sheets based on thermosetting resins,
Part 1: Specification
Part 2: Methods of determination of properties
BS 3962 Methods of test for finishes for wooden furniture,
Part 2: Assessment of surface resistance to wet heat
Part 3: Assessment of surface resistance to dry heat
Part 4: Assessment of surface resistance to cold liquids
Part 5: Assessment of surface resistance to cold oils and fats
Part 6: Assessment of resistance to mechanical damage
BS 4875 Strength and stability of domestic and contract furniture,
Part 5: Methods of determination of strength of tables and trolleys
Part 6: Methods of determination of stability of tables and trolleys
Part 7: Methods of determination of strength of storage furniture
Part 8: Methods of determination of stability of storage furniture
BS 5042 Bayonet lampholders
BS 5101 Lamp caps and holders
BS 5669 Specification for wood chipboard and methods of test for particle board
BS 5724 Safety code for medical electrical equipment
BS 5910 Methods of test for surface finishes for furniture,
Part 1: Assessment of surface resistance to cold liquids
BS 6250 Domestic and contract furniture,
Part 3: Specification for performance requirements for cabinet furniture
BS 6500 Insulated flexible cords and cables
BS 9562 Micro switches

Castor Manufacturers Association – Furniture Industry Research Association.
"Performance test requirements for furniture castors."

Index of Guidance Amendment No. IGAN 17 (for internal use)

The following documents are cancelled by the contents of this document:
CDB Mk3

Printed in the United Kingdom for Her Majesty's Stationery Office
Dd290393 8/89 C50 G3390 10170

CODE 18-77

HMSO publications are available from:

HMSO Publications Centre
(Mail and telephone orders only)
PO Box 276, London, SW8 5DT
Telephone orders 01-873 9090
General enquiries 01-873 0011
(queuing system in operation for both numbers)

HMSO Bookshops
49 High Holborn, London, WC1V 6HB 01-873 0011 (Counter service only)
258 Broad Street, Birmingham, B1 2HE 021-643 3740
Southey House, 33 Wine Street, Bristol, BS1 2BQ (0272) 264306
9-21 Princess Street, Manchester, M60 8AS 061-834 7201
80 Chichester Street, Belfast, BT1 4JY (0232) 238451
71 Lothian Road, Edinburgh, EH3 9AZ 031-228 4181

HMSO's Accredited Agents
(see Yellow Pages)

and through good booksellers

£4.80 net

ISBN 0 11 321242 9